SUPPLIER DOCUMENT COVER SHEET

SECTION ONE-SUPPLIER TO COMPLETE				
DOCUMENT TITLE	**Piping and Instrument Diagram**		**REV**	**0**
PROJECT NAME	**ESI SCHOLER INCINERATION**			
PACKAGE DESCRIPTION	**Cyanide Bag Incinerator**			
MANUFACTURED	**SCHOLER INDUSTRIES PTY. LTD**			
VENDOR DATA DOCUMENT NO. & SUBMISSION TO BE COMPLETED IN THE BOXES BELOW				
	-	**-**	**0**	
	PO NOMBER	**PR REF.**	**REV.**	

SECTION TWO-PROJECT OFFICE USE ONLY					
◉	**DOCUMENT REVIEW STATUS**				
○	Proceed.				
○	Proceed with exceptions noted				
○	Do not proceed				
○					
Reviewers Comment (Print, sign and date)					
Name:		Signature:		Date:	6/08/2020

LINE IDENTIFICATION SYSTEM

200-P-A1-1090

- NOMINAL SIZE
- SERVICE CLASSIFICATION
- CLASS AND SPECIFICATION
- FOUR DIGIT LINE NUMBER BETWEEN 1000 AND 9999 DETERMINED BY THE SERVICE CLASSIFICATION LISTED BELOW

SERVICE CLASSIFICATION	SERVICE ABBREVIATION	NUMBER SERIES
UTILITY WATER		
WATER	WU	1000
UTILITIES, AIR		
AIR, UTILITY	AU	4000
UTILITY GAS AND FUEL		
DIESEL FUEL	DF	5000
INSTRUMENTS		1.01

IDENTIFICATION LETTERS/TAG NUMBER

FIRST- LETTERS	CONTROLLERS GENERAL	CONTROLLERS SELF-ACTUATED CONTROL VALVE	SOLENOIDS, RELAYS, COMPUTING DEVICES	PRIMARY ELEMENT	VIEWING DEVICES	SAFETY DEVICES
A ALARM						
B BURNER	BC					
C USER'S CHOICE						
F FLOW RATE	FC	FCV				
FF FLOW RATIO						
G GLASS, VIEWING DEVICE						
H HAND	HS					
M MOTER						
T TEMPERATURE				TE		
X UNCLASSIFIED			XV			
	READOUT DEVICES	SWITCHES ALARM DEVICES				
	INDICATING	HIGH	LOW			
P PRESSURE	PI	PSH	PSL			

PIPING SYMBOLS

- GATE VALVE
- SIGHT GLASS
- BALL VALVE
- BALL VALVE WITH HAND OPERATOR
- BUTTERFLY VALVE
- CHECK VALVE
- RELIEF VALVE
- CONTROL VALVE
- SOLENOID VALVE
- DOUBLE SOLENOID VALVE
- INSULATED LINE (25TH)
  - 25 - INSULATION THICKNESS
  - TH - HEAT CONSERVATION
  - PP - PERSONNEL PROTECTION
- PLUG
- REDUCER
- BARRED TEE
- TUNDISH
- FILTER
- CONTINUATION FLAG (DWG No.)
- FLOW ARROW (MAJOR LINES)
- VENT TO SAFE LOCATION
- FILTER SCREEN
- UNION SET
- Y-STRAINER
- UV CELL
- IGNITION TRANSFORMER
- GENERAL PUMP

FLOW INSTRUMENT

PRESSURE (REFER NOTE 4)

- PCV — PRESSURE REDUCING REGULATOR SELF CONTAINED
- PSV — PRESSURE RELIEF OR SAFETY VALVE, ANGLE PATTERN, SPRING OR WEIGHT LOADED OR WITH INTEGRAL PILOT
- PI — VALVE_SIZE; VALVE_TAG; COMMENT; DIAL PRESSURE GAUGE
- TE — THERMOCOUPLE WITH THERMOWELL

INTERLOCK SYMBOLS

- I — INTERLOCK IMPLEMENTED IN SIS (SYMBOL MAY BE ENLARGED TO INCLUDE FUNCTIONAL LOGIC DIAGRAM NUMBER OR LOGIC FUNCTION).

TYPICAL CONNECTION ANY VARIABLE

- DIRECT CONNECTED INSTRUMENT
- ELECTRONICALLY CONNECTED
- EMERGENCY STOP

GENERAL INSTRUMENT

- FIELD MOUNTED DISCRETE INSTRUMENT
- LOCAL PANEL DISCRETE INSTRUMENT
- LOCAL PANEL PROGRAMMABLE LOGIC FUNCTION
- (REFER NOTE 6) TIV — TYPICAL CONTROL VALVE
- PILOT LIGHT
- CENTRAL CONTROL HOUSE COMPUTER FUNCTION. SAFETY SYSTEM FUNCTION

EQUIPMENT

- M — BLOWER

LINE LEGEND

MISCELLANEOUS SYMBOLS

- PROCESS CONNECTION
- ELECTRICAL SIGNAL
- PNEUMATIC LINK
- INTERNAL SYSTEM LINK (SOFTWARE OR DATA LINK)

PIPING AND FITTINGS

PIPE SIZE	PIPE DESCRIPTION	SCRD NPT FITTINGS CLASS 3000 ASTM A105N
15-80	SCH 40 ASTM A106 GR B SMLS GALV CS SCRD NPT ENDS	°90 ELBOW 45° ELBOW EQUAL TEE REDUCING TEE
100-300	STD WT ASTM A106 GR B SMLS BE	

MECHANICAL JOINTS

SIZE-DN	FLANGES CARBON STEEL PER ASME B16.5 ASTM AS105N	BOLTS & GASKETS
15-80	CLASS 150 RF SCH40 SCRD NPT ASTM A105N GALVANISED	STUD BOLTS ASTM A 193 B7 AND A 194 2H NUTS 1.5 mm THK NON ASBESTOS FOR RF FLANGES
BUTT WELD FITTINGS		
100-300	STD WT ASTM A234 Gr WPB	

VALVES

SIZE	DESCRIPTION	CODE
BALL		
15-40	ASTM CLASS 800 SW/SCRD FULL PORT	VB-112
BUTTERFLY		
50-300	ASTM CLASS 150 RF LUGGED BODY (NOTE7)	VBT-21

NOTES

1. THIS DRAWING SHOWS BASIC INSTRUMENTATION SYMBOLOGY TO ASSIST WITH P&ID INTERPRETATION ONLY. FOR DESIGN INFORMATION AND EXAMPLES CONSULT ISA S5.1 &ESI ENGINEERING INFORMATION MANAGEMENT- INFORMATION AND EXAMPLES CONSULT ISA S5.1 & OSL INSTRUMENT IDENTIFICATION GUIDELINE EIM-03.
2. THE "GENERAL INSTRUMENTATION AND FUNCTION" SYMBOLS AND "INTERNAL SYSTEM LINK" SYMBOL ARE DESIGNED TO BE COMPLETE WITH ANSI / ISA STANDARD S5.1. IN THE EVENT OF CONFLICT, ISA STANDARD S5.1 IS THE CONTROLLING DOCUMENT.
3. ADDITIONAL SYMBOLS AS MAY BE REQUIRED SHALL BE FROM ISA S5.1 STANDARD. DEFINE "USER CHOICE" AND "USER DEFINED" TAG LETTERS AND "SPECIAL" LOGIC BLOCKS ON THE DRAWINGS ON WHICH THEY APPEAR.
4. P&ID WILL NORMALLY SHOW ALL IN-LINE COMPONENTS.
5. ALL SIZES ARE NOMINAL DIAMETERS (DN) IN MM.
6. ALL MATERIAL, FABRICATION AND TESTING SHALL CONFORM TO ASME B31.3 PROCESS PIPING.
7. VALVES RATED FOR 1000 kPAG OPERATONG PRESSURE. FLANGE GASKETS NOT REQUIRED WHEN MOUNTED BETWEEN FLANGES.

REV NO.	DATE	REVISION	DRAWN	CHECK	ENGR.	SUPV.	MNGR.	REMARK
0	22/10/19	As Built	-	-	-	-	-	

PROPRIETARY AND CONFIDENTIAL

THE INFORMATION CONTAINED IN THIS DRAWING IS THE SOLE PROPERTY OF SCHOLER ESI INCINERATION. ANY REPRODUCTION IN PART OR AS A WHOLE WITHOUT THE WRITTEN PERMISSION OF SCHOLER ESI INCINERATION IS PROHIBITED.

DRAWN BY : MONTHICHA.P	DATE : 22 Oct 19
CHECKED BY : ALEX.C	APPROVED BY : TONY C.
ISSUE : FOR REVIEW	SCALE : -
SIZE : A3	SHEET : 1/3

TITLE : PIPING & INSTRUMENT DIAGRAM SHEET 1
STANDARD INSTRUMENT SYMBOL

ESI SCHOLER INCINERATION
152/2624 Plus City Park Srinakarin Suanluang, Chaloemprakiat Ratchakan thi 9 Rd., Nongbon, Pravate, Bangkok 10250
Tel: 662-1856446(7) Fax: 662-1856448
Email: info@esic.co.th, tony@esic.co.th www.esic.co.th

PROJECT : ESI SCHOLER INCINERATION

EQUIP. NAME : CYANIDE BAG INCINERATOR

DRAWING. No : ESI SCH_191/100-00 REV: 0

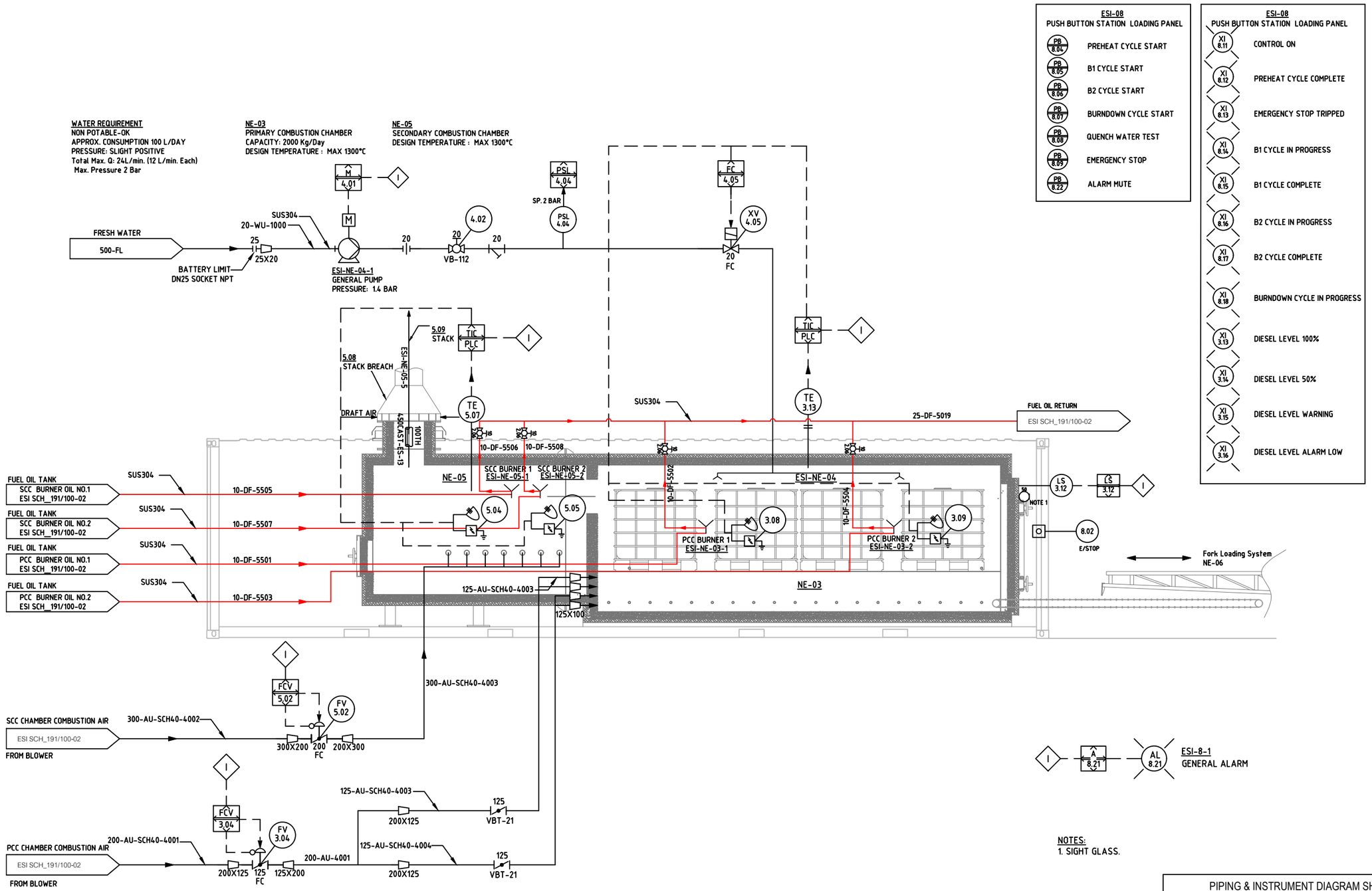

ESI-08
PUSH BUTTON STATION LOADING PANEL

PB 8.04	PREHEAT CYCLE START
PB 8.05	B1 CYCLE START
PB 8.06	B2 CYCLE START
PB 8.07	BURNDOWN CYCLE START
PB 8.08	QUENCH WATER TEST
PB 8.09	EMERGENCY STOP
PB 8.22	ALARM MUTE

ESI-08
PUSH BUTTON STATION LOADING PANEL

XI 8.11	CONTROL ON
XI 8.12	PREHEAT CYCLE COMPLETE
XI 8.13	EMERGENCY STOP TRIPPED
XI 8.14	B1 CYCLE IN PROGRESS
XI 8.15	B1 CYCLE COMPLETE
XI 8.16	B2 CYCLE IN PROGRESS
XI 8.17	B2 CYCLE COMPLETE
XI 8.18	BURNDOWN CYCLE IN PROGRESS
XI 3.13	DIESEL LEVEL 100%
XI 3.14	DIESEL LEVEL 50%
XI 3.15	DIESEL LEVEL WARNING
XI 3.16	DIESEL LEVEL ALARM LOW

REV NO.	DATE	REVISION	DRAWN	CHECK	ENGR.	SUPV.	MNGR.	REMARK
0	17/02/20	As Built	-	-	-	-	-	

PROPRIETARY AND CONFIDENTIAL

THE INFORMATION CONTAINED IN THIS DRAWING IS THE SOLE PROPERTY OF SCHOLER ESI INCINERATION. ANY REPRODUCTION IN PART OR AS A WHOLE WITHOUT THE WRITTEN PERMISSION OF SCHOLER ESI INCINERATION IS PROHIBITED.

DRAWN BY : -
DATE : 17 Feb 20
CHECKED BY : -
APPROVED BY : -
ISSUE : As Built
SCALE : -
SIZE : A3
SHEET : 1/1

TITLE : PIPING & INSTRUMENT DIAGRAM SHEET 2
PCC AND SCC COMBUSTION CHAMBER

ESI SCHOLER INCINERATION
152/264 Plus City Park Srinakarin Suanluang, Chaloemprakiat
Ratchakan thi 9 Rd., Nongbon, Pravate, Bangkok 10250
Tel: 662-1856446(7) Fax: 662-1856448
Email: info@esic.co.th, tony@esic.co.th www.esic.co.th

PROJECT : ESI SCHOLER INCINERATION
EQUIP. NAME : CYANIDE BAG INCINERATOR
DRAWING. No : ESI SCH_191/100-01
REV: 0

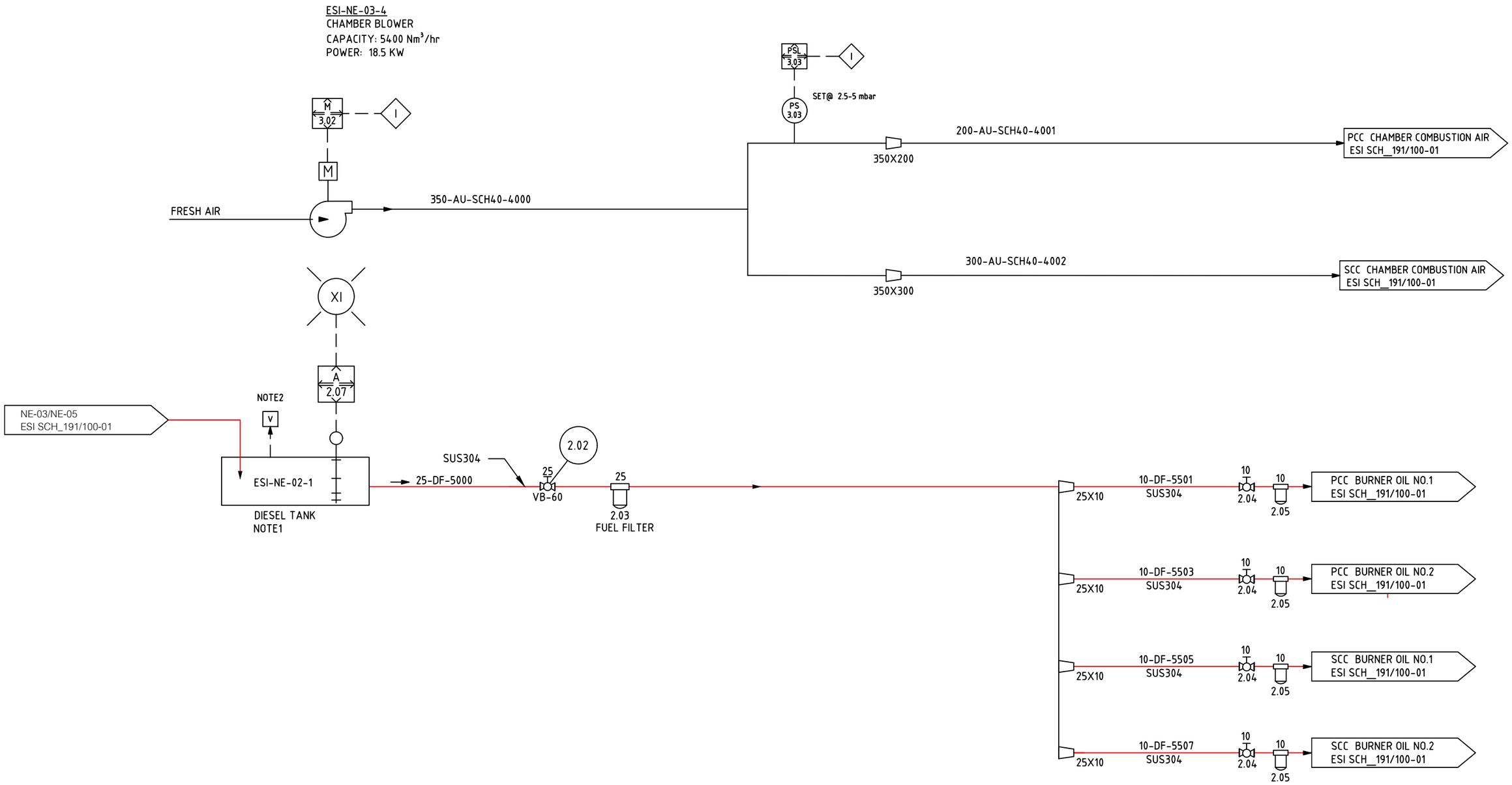

NOTE:

1. Diesel fuel tank will be filled up by mobile fuel tanker every two days.
   Fill Point refer to N12, Drawing No. PC2250-GA-Cover
2. Refer to Diesel Fuel Tank, N7 drawing No. PC2250-GA-Cover

REV NO.	DATE	REVISION	DRAWN	CHECK	ENGR.	SUPV.	MNGR.	REMARK
0	02/12/19	As Built	-	-	-	-	-	

PROPRIETARY AND CONFIDENTIAL

THE INFORMATION CONTAINED IN THIS DRAWING IS THE SOLE PROPERTY OF SCHOLER ESI INCINERATION. ANY REPRODUCTION IN PART OR AS A WHOLE WITHOUT THE WRITTEN PERMISSION OF SCHOLER ESI INCINERATION IS PROHIBITED.

DRAWN BY :	MONTHICHA.P	DATE :	02 Dec 19
CHECKED BY :	ALEX.C	APPROVED BY :	TONY C.
ISSUE :	REVIEW	SCALE :	-
SIZE :	A3	SHEET :	3/3

TITLE : PIPING & INSTRUMENT DIAGRAM SHEET 3
FUEL OIL+COMBUSTION AIR SUPPLY

ESI SCHOLER INCINERATION
152/264 Plus City Park Srinakarin Suanluang, Chaloemprakiat
Ratchakan thi 9 Rd., Nongbon, Pravate, Bangkok 10250
Tel: 662-1856446(7) Fax: 662-1856448
Email: info@esic.co.th, tony@esic.co.th www.esic.co.th

PROJECT : ESI SCHOLER INCINERATION

EQUIP. NAME : CYANIDE BAG INCINERATOR

DRAWING. No : ESI SCH_191/100-02 REV:0