Your Global Automation Partner

TURCK

TX700
HMI/PLC Series

Operating instructions

Hans Turck GmbH & Co. KG | T +49 208 4952-0 | F +49 208 4952-264 | more@turck.com | www.turck.com

Table of Contents

1 About this Document

These operating instructions describe the structure, functions and the use of the product and will help you to operate the product as intended. Read these instructions carefully before using the product. This is to avoid possible damage to persons, property or the device. Retain the instructions for future use during the service life of the product. If the product is passed on, pass on these instructions as well.

1.1 Target Groups

These instructions are aimed at qualified personnel and must be carefully read by anyone mounting, commissioning, operating, maintaining, dismantling or disposing of the device.

1.2 Explanation of Symbols Used

The following symbols are used in this manual:

The following symbols are used in this manual:

DANGER!
DANGER indicates a dangerous situation with high risk of death or severe injury if not avoided.

WARNING!
WARNING indicates a dangerous situation with medium risk of death or severe injury if not avoided.

CAUTION!
CAUTION indicates a dangerous situation of medium risk which may result in minor or moderate injury if not avoided.

NOTICE!
ATTENTION indicates a situation that may lead to property damage, if it is not avoided.

NOTE
NOTE indicates tips, recommendations and useful information on specific actions and facts. The notes simplify your work and help you to avoid additional work.

CALL TO ACTION
➢ This symbol denotes actions that the user must carry out.

RESULTS OF ACTION
➥ This symbol denotes relevant results of actions.

1.3 Other Documents

The following additional documents are available online at www.turck.com
- Data sheet
- Installation guide
- CAD data

1.4 Feedback about these Instructions

We make every effort to ensure that these instructions are as informative and as clear as possible. If you have any suggestions for improving the design or if some information is missing in the document, please send your suggestions to **techdoc@turck.com**.

2 Product Overview

Products have been designed as IoT edge devices with the combination of a powerful controller with networking capability (up to 3 Ethernet networks) and outstanding communication options including client/server OPC UA. They are the ideal choice for all demanding IoT edge applications in factory, marine and building automation.
The glass projected capacitive touchscreen and the brilliant displays with size up to 21.5" and resolution up to 1920x1080 guarantee great optical performance; with the support of multi-touch gesture programming they can create the most natural human interfaces.

TX700 devices have been designed to run the TX VisuPro software for powerful HMI applications.

- Gateway function with OPC UA Server and Client.
- Secure connectivity with JMcloud and full network separation
- Powerful browser wih industry standard Web engines
- Optional CODESYS V3 PLC runtime with choice of major I/O protocols
- Optional plug-in modules for fieldbus systems, I/O and controllers

2.1 Product Identification

The manual refers to the following models:

- TX705 Operator interface with TFT color 5" widescreen display multitouch projected capacitive touchscreen
- TX707 Operator interface with TFT color 7" widescreen display multitouch projected capacitive touchscreen
- TX710 Operator interface with TFT color 10.1" widescreen display multitouch projected capacitive touchscreen
- TX715 Operator interface with TFT color 15.6" widescreen display multitouch projected capacitive touchscreen
- TX721 Operator interface with TFT color 21.5" widescreen display multitouch projected capacitive touchscreen

The type plate is located on the rear of the device.
An example of this plate is shown in the figure below:

TX710	Product model name
100002031	Product part number
1832	Year/week of production
AA…	Serial number number
V…	Internal version ID of the product

2.2 Type Code

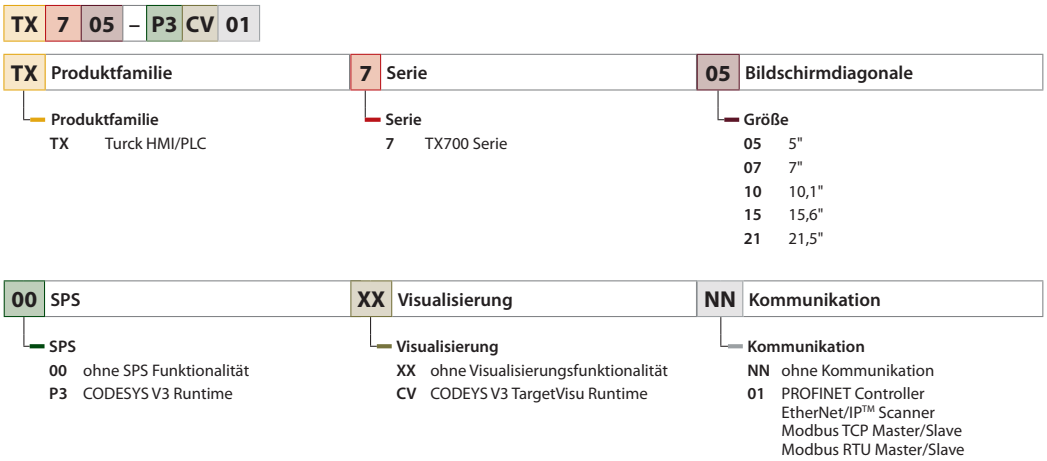

Fig.1: Type Code TX700

2.3 List of Available Devices

Ident no.	Device
100002029	TX705-P3CV01
100002030	TX707-P3CV01
100002031	TX710-P3CV01
100002032	TX715-P3CV01
100002033	TX721-P3CV01

3 Standards and Approvals

The products have been designed for use in an industrial environment in compliance with the 2014/30/EU EMC Directive.

The products have been designed in compliance with:

EN 61000-6-4	CISPR 22, Class A
	CISPR 16-2-3
EN 61000-6-2	EN 61000-4-2
	EN 61000-4-3
	EN 61000-4-4
	EN 61000-4-5
	EN 61000-4-6
	EN 61000-4-8
	EN 61000-4-11
	EN 61000-4-29
	EN60945

ATTENTION!
Operation in residential and commercial areas
Electromagnetic disturbances!
➤ In case of the operation of the devices in residential and commercial areas, observe the measurement values according to IEC-61000-6-3.

The products are in compliance with the Restrictions on Certain Hazardous Substances (RoHS) Directive 2011/65/EU.

In compliance with the above regulations the products are CE marked.

3.1 Special Instruction for Use

- The equipment shall only be used in an area of not more than pollution degree 2, as defined in IEC/EN 60664-1.
- The equipment shall be installed in an enclosure that provides a degree of protection not less than IP 54 in accordance with IEC/EN 60079-15.
- Transient protection shall be provided that is set at a level not exceeding 140 % of the peak rated voltage value at the supply terminals to the equipment.
- Care shall be taken not to allow layers of dust to form on the graphic panel in a way that might cause the accumulation of static charges.

4 Technical Specifications

4.1 Technical Data

	TX705	TX707	TX710	TX715	TX721
Touchscreen technology	True Glass Projected Capacitive, Multitouch				
Display/backlight	TFT Color / LED				
Colors	64 K	16M	16M	16M	16M
Brightness	300 Cd/m² typ.	500 Cd/m² typ.	500 Cd/m² typ.	400 Cd/m² typ.	300 Cd/m² typ.
Resolution	800x480	800 × 480	1280 × 800	13660 × 768 (HD)	1920 × 1080 (full HD)
Diagonal (inches)	5″ widescreen (16:9)	7″ widescreen (16:9)	10.1″ widescreen (16:9)	15.6″ widescreen (16:9)	21.5″ widescreen (16:9)
Dimming	yes				
CPU	A8, 1 GHz	A9 dual core, 800 MHz	A9 dual core, 800 MHz	A9 quad core, 800 MHz	A9 quad core, 800 MHz
Operating System	Linux RT				
Flash	4 GB	4 GB	4 GB	8 GB	8 GB
SD card slot	yes				
RAM	512 MB	1 GB	1 GB	2 GB	2 GB
Serial port (local)	1 (software configurable as RS232, RS485 or RS422)				
Serial port (extendable with plug-in modules)	max. 1	max. 2	max. 2	max. 2	max. 2
Ethernet port	2 × 10/100 Mbit	2 × 10/100 Mbit, 1 × 10/100/1000 Mbit			
USB Host port	1 × USB 2.0, max. 500 mA	2 × USB 2.0, max. 500 mA			
Expansion slot	1 × for optional plug-in modules	2 × for optional plug-in modules			
Voltage supply	DC Power Connector - AWG24 wire size - R/C Terminal Blocks (XCFR2), Female pitch 5.08 mm, torque 4.5 lb-in. 3 conductor, 1,5 mm² wire size minimum, minimum temperature conductor rating 105 °C.				
Real Time Clock	yes				
Back-up battery	3 V, 50 mAh Lithium, rechargeable, not replaceable, type VL2330				
Operational voltage	24 VDC (10…32 VDC)				
Current consumption (at 24 VDC)	0.6 A	0.7 A	1 A	1.2 A	1.7 A
Weight	1 kg	1.3 kg	1.7 kg	4.1 kg	6.1 kg
Input protection	automatic	Electronic	Electronic	Electronic	Electronic
Accuracy RTC (at 25 °C)	< 100 ppm				

NOTE
For applications requiring compliance with EN 61131-2 and specifically in reference to 10 ms voltage dips, the minimum power supply voltage is 18 VDC.

4.2 Environmental Conditions/Protection Class

Environmental conditions		
Operating temperature (surrounding air temperature)	-20…+60 °C (vertical installation) Plug-in modules and USB devices may limit max temperature to +50 °C	EN 60068-2-14
Storage temperature	-20…+70 °C	EN 60068-2-1 EN 60068-2-2 EN 60068-2-14
Operating and storage humidity	5…85 % RH non-condensing	EN 60068-2-30
Vibrations	5…9 Hz, 7 mm_{p-p} 9…150 Hz, 1 g	EN 60068-2-6
Shock	± 50 g, 11 ms, 3 pulses per axis	EN 60068-2-27
Protection class		
Front panel	IP66	EN 60529
Rear	IP20	EN 60529

4.3 Electromagnetic Compatibility (EMC)

Electromagnetic Compatibility (EMC)		
Radiated disturbance test	Class A	CISPR 22, CISPR 16-2-3
Electrostatic discharge immunity test	8 kV (air electrostatic discharge) 4 kV (contact electrostatic discharge)	EN 61000-4-2
Radiated, radio-frequency, electromagnetic field immunity test	80 MHz …1 GHz, 10 V/m 1,4 GHz … 2 GHz, 3 V/m 2 GHz … 2.7 GHz, 1 V/m	EN 61000-4-3
Burst immunity test	± 2 kV DC power port ± 1 kV signal line	EN 61000-4-4
Surge immunity test	± 0,5 kV DC power port (line to earth) ± 0,5 kV DC power port (line to line) ± 1 kV signal line (line to earth)	EN 61000-4-5
Immunity to conducted disturbances inducted by radiofrequency field	0.15…80 MHz, 10 V	EN 61000-4-6
Power frequency magnetic field immunity test	Enclosure, 50/60Hz, 30A/m	EN 61000-4-8
Voltage dips, short interruptions and voltage variations immunity test	Port: AC mains; Level: 100 % duration: 1 cycle and 250 cycles (50 Hz); 40 % duration: 10 cycles (50 Hz); 70 % duration: 25 cycles (50 Hz); Phase: 0°-180°	
Test executed on the 230 VAC side of the power supply		EN 61000-4-11
	Port: DC mains; Level: 0% duration: 10ms 20 spaces by 1s	
Test executed on the 24Vdc of the EUT		EN 61000-4-29
Durability information		
Backlight service life (LED type)	40.000 hours or more (Time of continuos operation until the brightness of the backlight reaches 50 % of the rated value when the surrounding air temperature is 25 °C).	

NOTE
Extended use in environments where the surrounding air temperature is 40 °C or higher may degrade backlight quality/reliability/durability.

4.4 Dimensions

4.4.1 TX705

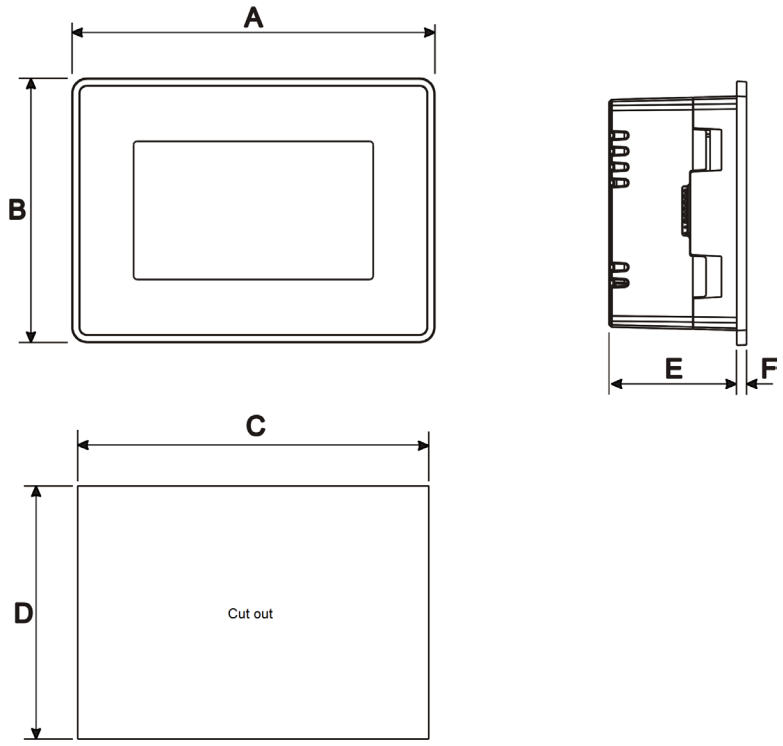

Fig.2: Dimensions TX705

Model	A	B	C	D	E	F
TX705	147 mm/5.78″	107 mm/4.21″	136 mm/5.35″	96 mm/3.78″	56 mm/2.40″	8 mm/0.31″

4.4.2 TX707/TX710/TX715/TX721

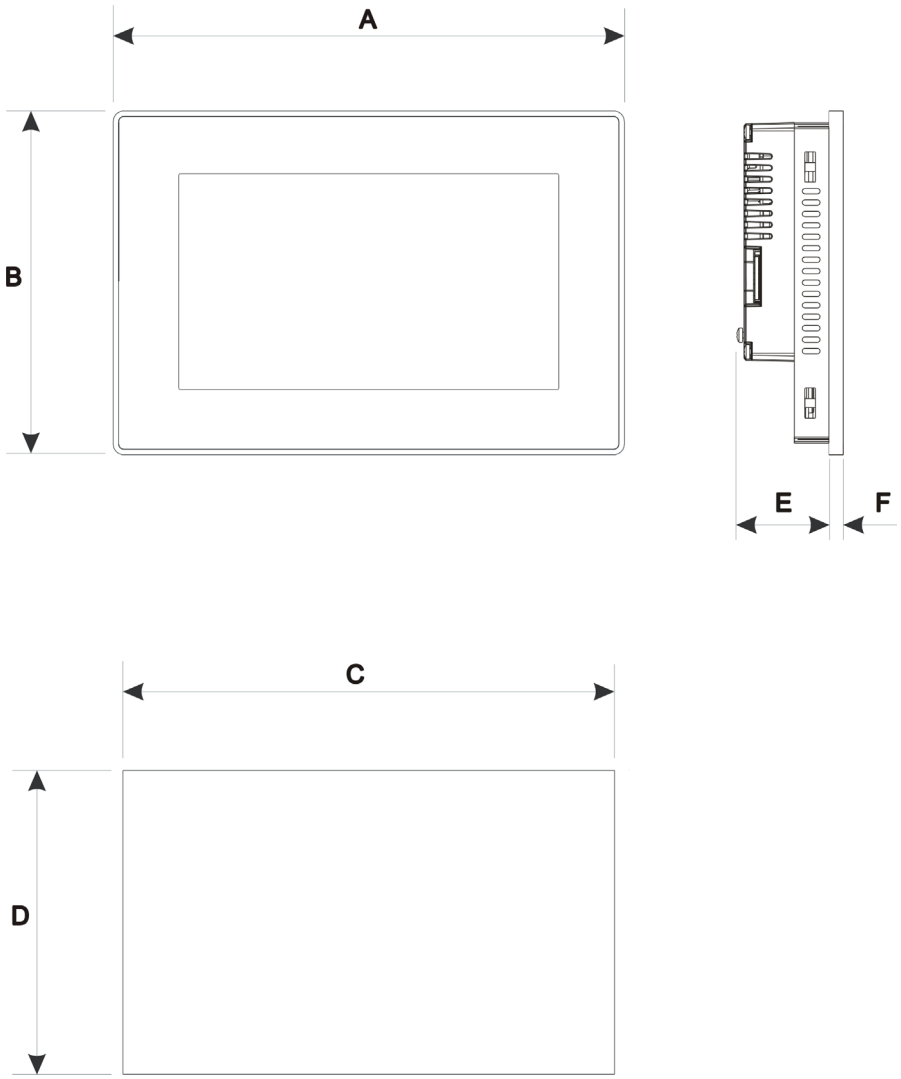

Fig.3: Dimensions TX707/TX710/TX715/TX721

Model	A	B	C	D	E	F
TX707	187 mm/7.36″	147 mm/5.79″	176 mm/6.90″	136 mm/5.35″	47 mm/1.85″	8 mm/0.31″
TX710	282 mm/11.10″	197 mm/7.80″	271 mm/10.67″	186 mm/7.32″	56 mm/2.20″	8 mm/0.31″
TX715	422 mm/16.60″	267 mm/10.50″	411 mm/16.18″	256 mm/10.00″	56 mm/2.20″	8 mm/0.31″
TX721	552 mm/21.73″	347 mm/13.66″	541 mm/21.30″	336 mm/13.22″	56 mm/2.20″	8 mm/0.31″

5 Installing the HMI

5.1 Installation Environment

Avoid prolonged exposition to direct sunlight to avoid the risk of overheating the device.

The equipment is not intended for installation in contact with corrosive chemical compounds.

Check the resistance of the front panel film to a specific compound before installation.
➤ Do not use tools of any kind (screwdrivers, etc.) to operate the touch screen of the panel.

In order to meet the front panel protection class, proper installation procedure must be followed:
- The borders of the cutout must be flat
- Screw up each fixing screw until the bezel corner get in contact with the panel.
- The cut-out for the panel must be of the dimensions indicated in this manual.
- The IP66 is guaranteed only under the following conditions:
  - Max. deviation from the plane surface to the cut-out: ≤ 0.5 mm
  - Thickness of the case on which the equipment is mounted: 1,5 mm to 6 mm
  - Max. surface roughness where the gasket is applied: ≤ 120 µm

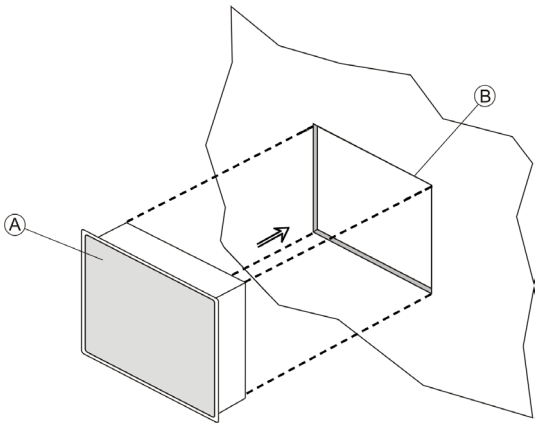

Fig.4: TX700 – Mounting

5.2 Mounting of the HMI

NOTE
For all installation notes, please refer to the Installation Guide provided with the product.

➤ Place the fixing brackets contained in the fixing kit as follows:

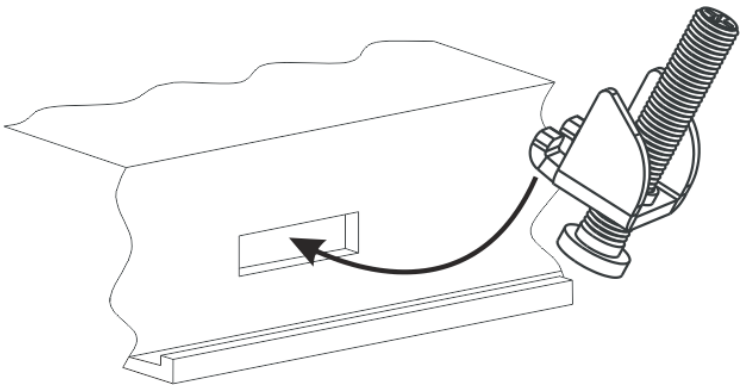

Fig.5: Mouting the fixing brackets

➤ Screw each fixing screw until the bezel corners get in contact with the HMI.

NOTE
Tightening torque: 130 Ncm or screw each fixing screw until the bezel corner gets in contact with the panel.

6 Connecting

6.1 Connecting TX705

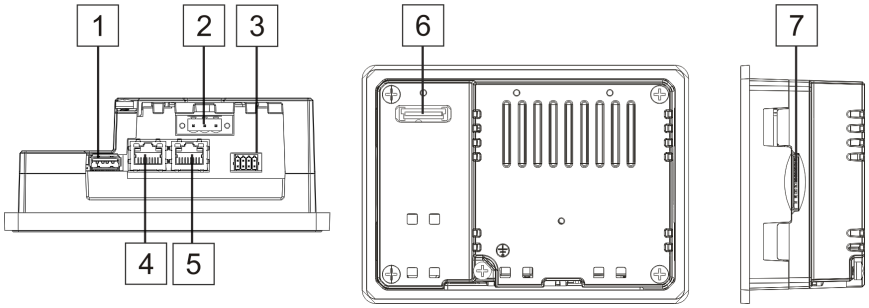

Fig.6: TX705 – connection options

Connector	Description
1	USB Port
2	Power supply
3	Serial Port
4	Ethernet port 0 (10/100 Mbit)
5	Ethernet port 1 (10/100 Mbit)
6	Expansion slot for plug-in modules
7	SD card slot

6.2 TX707/TX710/TX715/TX721

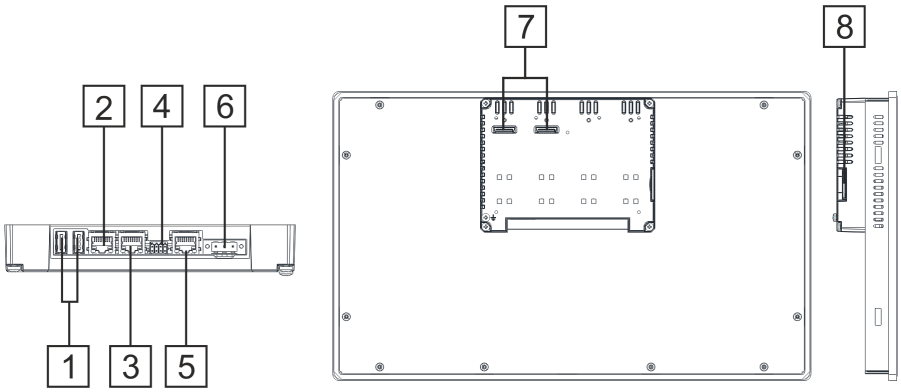

Fig.7: TX707/TX710/TX715/TX721 – connection options

Connector	Description
1	USB Port
2	Ethernet port 2 (10/100 Mbit)
3	Ethernet port 1 (10/100 Mbit)
4	Serial port
5	Ethernet port 0 (10/100/1000 Mbit)
6	Power supply
7	2 × Expansion slot for plug-in modules
8	SD card slot

6.3 Serial Port

The serial port is used to communicate with a PLC or with another type of device.
Different electrical standards are available for the signals in the PLC port connector: RS232, RS422, RS485.
The serial port is software programmable. Make sure you select the appropriate interface in the programming software.

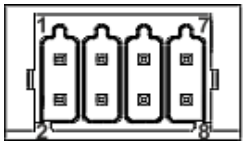

Fig.8: Serial port

Pin	RS232	RS422/RS485
1	RX	CHB-
2	TX	CHA-
3	CTS	CHB+
4	RTS	CHA+
5	+5 VDC output	+5V output
6	GND	GND
7	n.c.	n.c.
8	SHIELD	SHIELD

NOTE
To operate in RS485, pins 1-2 and 3-4 must be connected externally.

The communication cable must be chosen for the type of device being connected.

6.4 Ethernet Ports

The Ethernet ports have two status indicators. .

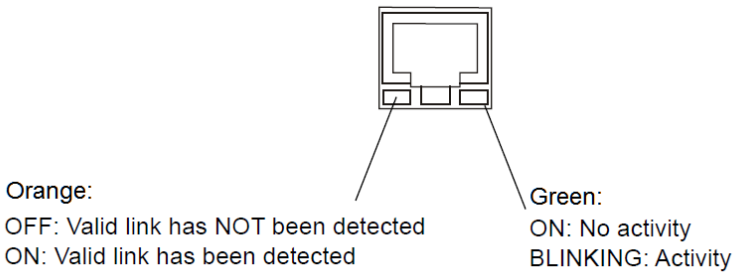

Fig.9: Ethernet ports

6.5 SD Card Slot

	Specification
Supported types	SD, SDHC
Format	FAT, FAT32
Max. size	Limited by the FAT32 specification ≤ 4 GB for one single file ≤ 32 GB in total

6.6 USB Port

	Allowed formatting
Format	FAT, FAT32
Max. size	Limited by the FAT32 specification ≤ 4 GB for one single file ≤ 32 GB in total

7 Optional Plug-in Modules

TX700 HMIs have several optional plug-in modules, multiple module configurations are possible.

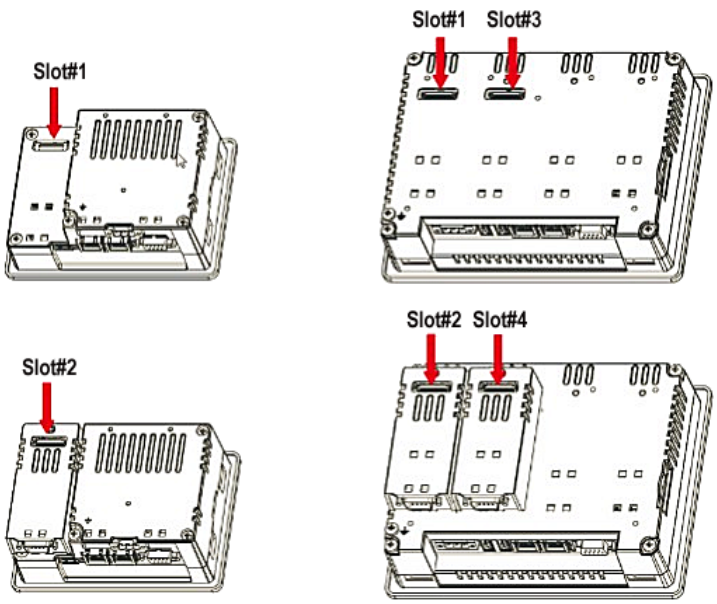

Fig.10: Slots for plug-in modules

Slot#2 and Slot#4 are available only if the plug-in module has the "bus extension connector".

Each slot carries 3 communication channels:
- 1 serial interface
- 1 CAN interface
- 1 SPI interface

NOTE
It is not possible to stack two modules that are using the same type of interface.
The following table shows, which plug-in module and how many plug-in modules can be used at which HMI:

Module	Application	Max. Modules	Interface type/ communication channel	Bus Extension connector
TX-CAN	CAN	– 1 for TX705 – 2 for all other TX700 models	CAN	yes
TX-RS485	RS485/RS422		Serial	yes
TX-RS232	RS232		Serial	yes
TX-IO-DX06	Multifunction I/O	– 1 for all TX700 models	I/O (SPI)	no
TX-IO-XX03	Compact I/O	– 1 for TX705 (can not be plugged directly, additional module with extension slot necessary, CAN or RS×××) – 2 for all other TX700 models	I/O (SPI)	no

The column max. modules refers to the max. number of modules which can be plugged into the HMI (all slots).

7.1 Slot Assignment – CAN-Port

Physical interface	CODESYS parameter "Network"
Slot 1	Network 0
Slot 2	Network 0
Slot 3	Network 1
Slot 4	Network 1

7.2 Slot Assignment – Serial Interfaces

Physical interface	CODESYS parameter "Device/Interface Parameter"	CODESYS parameter "Modbus COM/COM Port"
local serial COM port	Mode COM1	COM Port 1
Slot 1	Mode COM2	COM Port 2
Slot 2	Mode COM2	COM Port 2
Slot 3	Mode COM3	COM Port 3
Slot 4	Mode COM3	COM Port 3

Slot 1 to Slot 4 refer to the Extension Slots on the rear of the device, see „Abb. 10: Erweiterungssteckplätze für Plug-in-Module“ S. 17.

7.3 Optional Plug-in Module Installation Procedure

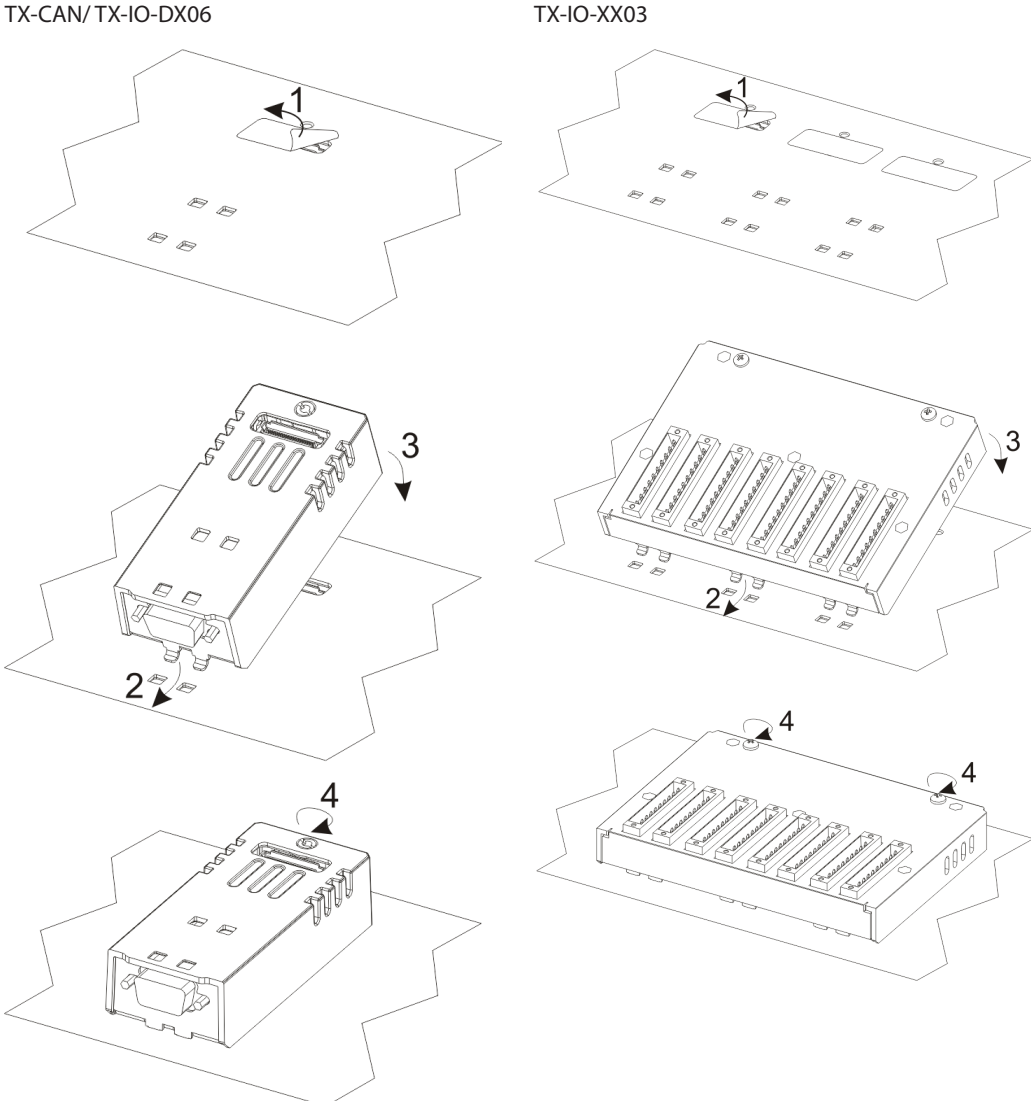

Fig.11: Installation of optional plug-in modules

8 Connecting the Power Supply

The power supply terminal block is shown in the figure below.

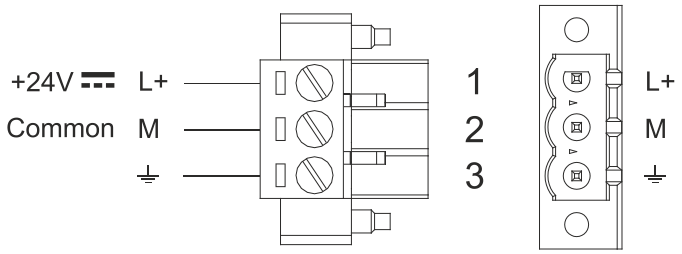

Fig.12: Power supply terminal block

NOTE
Ensure that the power supply has enough power capacity for the operation of the equipment.

8.1 Grounding the device

The unit must always be grounded to earth with A minimum of 1.5mm². Grounding helps to limit the effects of noise due to electromagnetic interference on the control system.

The earth connection will have to be done using the grounding screw located near the power supply terminal block. The screw for the ground connection is marked with an engraved ground symbol. Also connect terminal 3 on the power supply terminal block to ground.

The power supply circuit may be floating or grounded. If the power supply circuit is grounded, connect to ground the power source common as shown in figure (see below) with a dashed line.
When using the floating power scheme, note that the device internally connects the power common to ground with a 1 MΩ resistor in parallel with a 4,7 nF capacitor.
The power supply must have double or reinforced insulation.
The suggested wiring for the power supply is shown below.

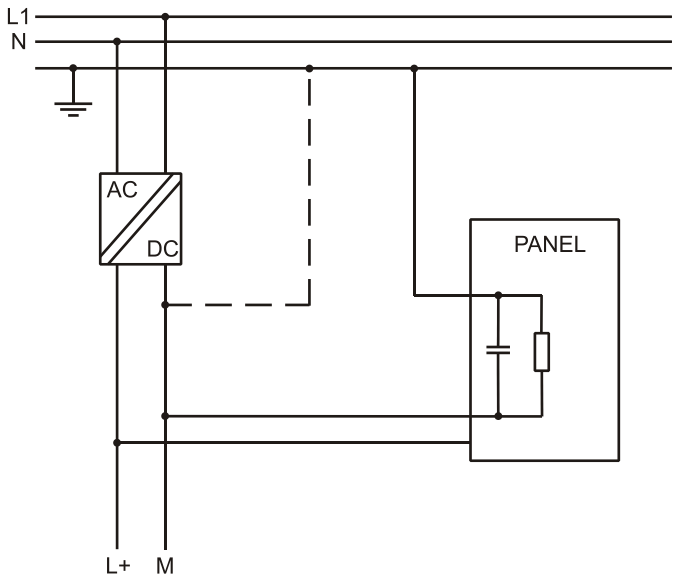

Fig.13: Power supply wiring

All the electronic devices in the control system must be properly grounded.
Grounding must be performed according to applicable regulations.

NOTE
The power connector is part of the scope of delivery and can be ordered as spare part, see „14 Anhang: Zubehör“ S. 27.

9 Battery

These devices are equipped with rechargeable Lithium battery, not user-replaceable.
The following information is maintained by the battery:

- Hardware real-time clock (date and time)
-

Charge:
At first installation the battery must be charged for 48 hours.
When the battery is fully charged, it ensures a period of 3 months of data back-up at 25 °C.

NOTE
Dispose electrical devices according to local regulations.

9.1 TX705

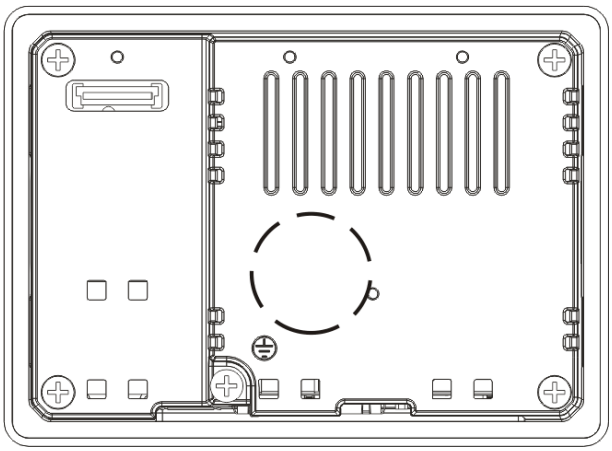

Fig.14: Battery position TX705

9.2 TX707/TX710/TX715/TX721

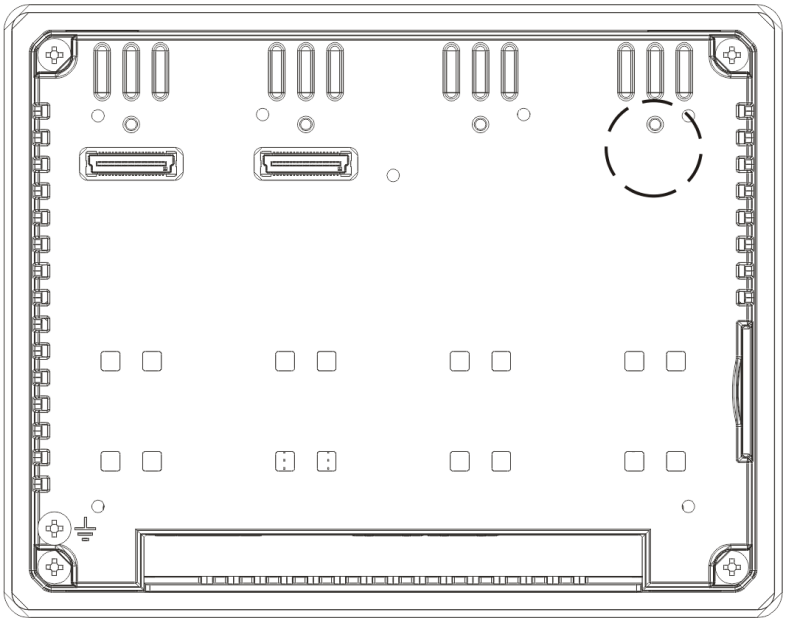

Fig.15: TX707/TX710/TX715/TX721

10 Special Instruction for Use

- Install the HMI device according to the accompanying installation instructions.
- Ground the HMI device according to the accompanying installation instructions.
- Only qualified personnel may install the HMI device or repair it.
- Ensure that the aeration holes are not covered.
- Care shall be taken not to allow layers of dust to form on the faceplate of the HMI device in a way that might cause the accumulation of static charges. Keep the faceplate of the HMI device clean: The equipment must be cleaned only with a soft cloth and neutral soap product.
- Do not use solvents.
- This device should not be used for purposes and methods other than indicated in this document and in the documentation accompanying the product.

11 Getting Started

11.1 Programming with CODESYS

The devices are delivered with a pre-installed CODESYS runtime.
CODESYS (≥ V 3.5.12.0) and the package "TXxxx HMI/PLC series" for the HMI/PLCs have to be installed on a PC computer running Microsoft Windows.
The CODESYS software as well as the CODESYS package for the HMI/PLCs can be downloaded from **www.turck.com**.

11.2 Programming with TX VisuPro

For programming the HMI/PLCs with TX VisuPro, the software tool has to be installed on a PC computer running Microsoft Windows.

If TX VisuPro should be used instead of the CODESYS TargetVisu, the TX VisuPro runtime needs to be installed. Before installing TX VisuPro, the existing TargetVisu runtime has to be deleted. To do so, use the internal configuration menu:
"System Settings" → "Management" → "Data" → "Clear"

There are two options to transfer a TX VisuPro runtime project to a device:
- Ethernet:
  Connect the HMI device to the computer with an Ethernet network. In TX VisuPro select the command Run/Download to target. You may have to ensure that the proper firewall policy has been configured in the computer to allow TX VisuPro to access the network.
- USB:
  Create an Update Package using TX VisuPro and copy it to a USB Flash drive.

12 Adapting the System Settings

The TX700 HMIs have a system settings interface to allow configuration of system options.
The user interface of System Settings is based on HTML pages accessible from the HMI screen or remotely using a Web browser Chrome V44 or higher using port 443.
To connect enter the address **https://IP** where IP is the IP address of the HMI device.
Default username is "admin", default password is "admin". Use navigation menu on the left side of the screen to browse through the vailable options.

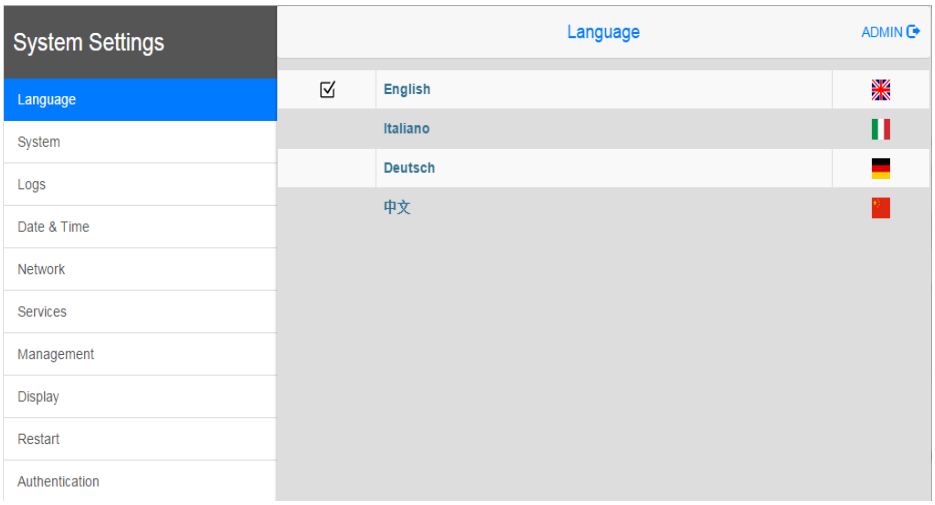

Fig.16: System settings

The active item of menu is highlighted on the left side of the screen. The right side shows related information and settings. Depending on the size of the HMI screen, both menu and content of selected item may be shown on screen at the same time or not.

System Settings has 2 modes of operation:

Mode	Description
User Mode	TX VisuPro runtime is running or the HMI device is in "factory default" status.
System Mode	TX VisuPro runtime is not running or the HMI device has a software failure. System Mode includes all options available in User Mode and additionally includes commands dedicated to system upgrade and recovery not available when running in User Mode.

12.1 Access the System Settings in User Mode

NOTICE!
System modification during operation
Undefined machine states due to device restart or loss of functionality!
➤ Do not modify the system/network settings during operation.
➤ Always stop the machine and disconnect the HMI when modifying the system settings.

	Description
Factory default status	Press "System Setting" button on the HMI screen
TX VisuPro run-time running	Recall context menu and select "System Settings". To recall the context menu click and hold any unused area of the touchscreen for a few seconds. Default hold time is 2 seconds.

12.2 Access the System Settings in System Mode

NOTICE!
System modification during operation
Undefined machine states due to device restart or loss of functionality!
➤ Do not modify the system/network settings during operation.
➤ Always stop the machine and disconnect the HMI when modifying the system settings.

Status	Description
Normal operation	If TX VisuPro runtime is not running: Press "System Setting" button on the device screen to recall System Settings in User Mode. Select "Restart" -> "Config OS" to reboot in System Mode. If TX VisuPro runtime is running: recall context menu and select "System Settings". To recall the context menu click and hold any unused area of the touchscreen for a few seconds. Default hold time is 2 seconds to enter in System Settings in User Mode. Select "Restart" -> "Config OS" to reboot in System Mode.
Recovery operation	If the HMI is not responsive, use the so-called "tap-tap" procedure. This procedure consists in tapping the surface of the touchscreen during the device power-up phase. Tapping frequency must be high (2 Hz or more). Start tapping the touch-screen as soon as power has been applied to the device. When the sequence has been recognized, the system shows the message: "Tap Tap detected, Going to Config Mode" on the screen.

System Settings includes options for basic settings of the device:

Setting	Description
Language	Configure language used for System Setting menu only.
System	Show information about platform, status and timers (like System on time, backlight on time).
Logs	Enable persistent log for BSP and allows exporting it.
Date & Time	Change the device date and time, including time zone and NTP Server.
Network	Configure IP Address of Ethernet interface and the other network settings like DNS, Gateway, DHCP, Hostname, routing and bridging.
Services	Enable/disable services. Examples of services are: OpenSSH server, Bridge, Cloud, Router, SNMP and logging.
Management	Update of BSP components (Main OS, Config OS, Boot loader, XLoader), check for partitions consistence, update of splash screen, information about usage and size of partitions. The update of Main OS is available only in System Mode, the update of Config OS is only in User Mode.
Display	Adjust display brightness, configure automatic backlight turnoff
Restart	Restart the device. "Main OS" option restarts the device in User Mode, "Config OS" option restarts the device in the System Mode showing System Settings.
Authentication	Configure password for administrator ("admin") and for the standard user ("user"). Administrator has full access to System Settings (updates of BSP and other system components). Standard user has some limitations.

13 Unpacking and Packing the Device

13.1 TX705/TX707/TX710

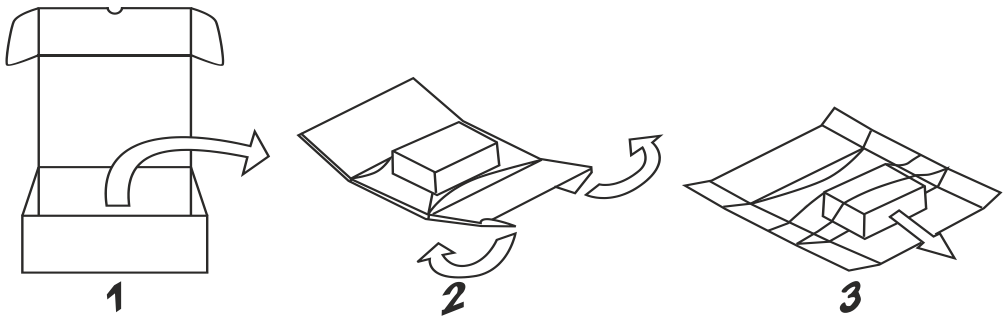

Fig.17: Unpacking TX705/TX707/TX710

To repack the unit, please follow the instructions backwards.

13.2 TX715/TX721

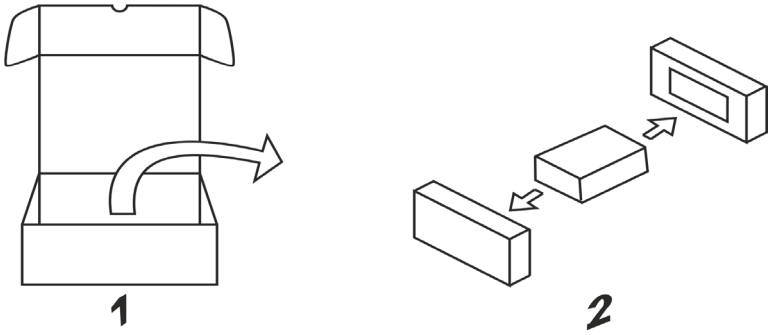

Fig.18: Unpacking TX715/TX721

To repack the unit, please follow the instructions backwards.

14 Appendix: Accessories

14.1 Plug-in Extension Modules

Ident no.	Type	Description
6828210	TX-CAN	1 × CAN interface
6828203	TX-IO-DX06	8 × digital inputs, 24 VDC, pnp 6 × digital outputs, 24 VDC, 0.5 A, pnp 1 × relay output, NO
6828201	TX-IO-XX03	20 × digital inputs, 24 VDC, pnp 12 × digital outputs, 24 VDC, 0.5 A, pnp 8 × analog inputs, U, I, RTD, TC 4 × analog outputs, U, I
100002598	TX-RS485	Serial interface for RS485/RS422 communication
100002599	TX-RS232	Serial interface for RS232 communication

14.2 Mounting Material/Power Supply Connector

Ident no.	Type	Description
100003188	TX700-MOUNT-07	Mounting material for TX700 for 5" and 7" devices 4× fixing bracket 1 × power supply connector 1 × connector for the serial interface
100003189	TX700-MOUNT-10	Mounting material for TX700 for 10" devices 9 × fixing bracket 1 × power supply connector 1 × connector for the serial interface
100003190	TX700-MOUNT-15	Mounting material for TX700 for 15' devices 12 × fixing bracket 1 × power supply connector 1 × connector for the serial interface
100003191	TX700-MOUNT-21	Mounting material for TX700 for 21' devices 14 × fixing bracket 1 × power supply connector 1 × connector for the serial interface
100002938	TX-PSC	TX power supply onnector

14.3 USB/SD Accessory

Ident no.	Type	Description
6828025	SD CARD 2GB	SD card, 2GB
6827348	USB 2.0 Industrial Memory Stick	1GB , industrial USB stick
6827389	USB 2.0 EXTENSION 5M	USB 2.0 extension cable, male (A) to female (A), 5 meters
6827390	USB 2.0 EXTENSION ACTIVE 5M	USB 2.0 extension cable, male (A) to female (A), with active repeater, 5 meters

NOTE
Further accessories like field bus nodes, bus and supply cables, junction boxes, power supplies etc. can be found on www.turck.com.

Hans Turck GmbH & Co. KG | T +49 208 4952-0 | F +49 208 4952-264 | more@turck.com | www.turck.com

TURCK

30 subsidiaries and over
60 representations worldwide!

100002669 | 2018/09

www.turck.com