EXAIR®

MANUFACTURING INTELLIGENT COMPRESSED AIR® PRODUCTS SINCE 1983

COAT

COOL

CONSERVE

CLEAN

CONVEY

35 CATALOG

NEW

Ultrasonic Leak Detector.....pg. 18
1/2 NPT Hollowstream™ Cone Nozzles....pg. 105
Varistat Benchtop Ionizer™.....pg. 147
ATEX Cabinet Cooler® Systems.....pg. 228

TECHELP DIRECT 1-800-903-9247

YOU REQUESTED THIS CATALOG AND PRICE LIST.
PLEASE SEE MAILING LABEL ON BACK COVER.

Stay up to date by visiting our website and take advantage of the information and services we didn't have room to display in this catalog.

EXAIR.com®

The digital home of Intelligent Compressed Air® products for industry

Where you can

- **Chat live** with our problem solving, technical expert Application Engineers
- **Watch product videos** to learn more about the features and benefits of our engineered products
- Quickly **order online** with a purchase order or credit card (US & Canada)
- **Access product presentation slides** you can use to educate others
- **Find International Distributors** all across the world

Access our Knowledge Base to

- **Download 3D models** and CAD drawings in multiple formats to place into your drawings
- **Calculate air savings and ROI** to see how quickly EXAIR products will pay off
- Search our **Case Study Library & Applications database** and become familiar with how our products solve problems
- **Use our product FAQ's** for quick access to our most common questions
- Learn about our free **Efficiency Lab** service and use it to **determine air and money savings** you can achieve when installing EXAIR engineered solutions
- Collect compressed air data and pipe sizing recommendations
- **Find** Flow, Force and Heat conversions

Visit our PDF library and download

- Electronic files of **the entire catalog** or individual sections
- **Installation and Maintenance Guides** on every EXAIR product
- Our current **price list** to have all product prices in one convenient location
- EXAIR's **Air Nozzle Blowoff Guide** to see the details on our enormous selection of sizes, materials and performance options

Follow our blog for 5 new entries a week and learn

- Details and installations of widely varied applications
- The methodology and results of critical mathematical formulas which help determine money savings, air savings, performance benefits and more
- New product releases before they reach our catalog or website
- More about EXAIR, our team and community involvement
- **Go to** blog.exair.com

Make social connections

- Watch over **150 videos** on EXAIR's YouTube Channel and see product features and benefits, applications, Tips & Tricks, How-to, and our team members.
- Follow our Company on Twitter @EXAIR or our Application Engineers and learn more about promotions, updates on manufacturing, engineering and international industry perspective.


@EXAIR_BF


@EXAIR_EK


@EXAIR_JB


@EXAIR_JS


@EXAIR_NR


@EXAIR_RB


@EXAIR_TD

- Connect with us on Facebook at facebook.com/exair or follow us on Linked In, Twitter and Instagram.

Not on a PC? Our website is mobile friendly

Terms and Conditions (U.S. and Canada Only)

Terms: Net 30 days upon credit approval, Visa, MasterCard, Discover and American Express.

VISA MasterCard DISCOVER NOVUS AMERICAN EXPRESS **Cards**

ICC (International Chamber of Commerce) INCOTERM 2010: EX WORKS (EXAIR, 11510 Goldcoast Dr., Cincinnati, Ohio 45249, USA.)

Delivery All cataloged products are shipped from stock, via U.P.S. within 24 hours after receipt of order. Priority shipment is available upon request.

Ordering: Call 1-800-903-9247 or +1-513-671-3322 Worldwide 7:00 a.m. to 4:00 p.m. ET (Mon. - Fri.)
Fax toll free 1-866-329-3924 or Worldwide +1-513-671-3363
E-mail: orders@exair.com Secure website: www.exair.com

Remit to address (payments only): EXAIR Location 00766, Cincinnati, Ohio 45264-0766

Tax: Sales and use tax, where applicable, are not included.

Technical Assistance: Please call our Application Engineering Department,
1-800-90-EXAIR (1-800-903-9247) e-mail at techelp@exair.com.

Built to Last 5 yr. WARRANTY

Warranty: 5 Year "Built To Last" Warranty against defects in workmanship and materials on all compressed air products*. Defective products must be returned freight prepaid for repair or replacement at our option. This warranty applies under conditions of normal use, but does not apply to defects that result from intentional damage, negligence, unreasonable use, wear or exposure.

*5 Year Warranty applies to compressed air products only. A 1 Year Warranty applies to all accessories and electrically powered products.

EXAIR's Unconditional Guarantee: Extends to all U.S. and Canadian customers and includes invoiced U.P.S. Ground Service shipping charges. Products returned after the 30 day guarantee period are subject to a 15% restocking charge. Products must be returned freight prepaid.

Copyright Restrictions: The content of the EXAIR Catalog, including all photos, graphics, drawings and arrangements are proprietary to EXAIR LLC and are protected by the United States and international copyright and trademark laws. You are authorized to use the contents of the EXAIR Catalog for personal use or as it relates to your role as a current or prospective customer of EXAIR. The contents of this catalog may not be copied or modified for any type of publication or distribution without the prior written consent of EXAIR. The content of the EXAIR Catalog is the intellectual property solely of EXAIR with no rights transferred to other parties. No part of this catalog may be reproduced for any commercial purposes without the express authorization in writing by EXAIR.

Trademarks: "EXAIR.com", "EXAIR", "Cabinet Cooler", "E-Vac", "Intelligent Compressed Air", "VariBlast", "Gen4", "Intellistat", "EasySwitch", "TurboBlast", "Varistat" and "Compressed Air Intelligence" are registered trademarks of the EXAIR LLC. The EXAIR logo, product names, designs and descriptive phrases are trademarked by EXAIR. These trademarks may not be used without prior written permission of EXAIR.

EXAIRLogger, EFC, Digital Flowmeter, Hot Tap Digital Flowmeter, Digital Sound Level Meter, High Power Cold Gun, Super Air Knife, Standard Air Knife, Full-Flow Air Knife, Air Cannon, Super Air Amplifier, Adjustable Air Amplifier, Super Air Nozzle, Micro Air Nozzle, High Power Safety Air Nozzle, Stay Set Hose, Soft Grip Super Air Scraper, Super Air Scraper, Super Blast Safety Air Gun, Super Air Wipe, Heavy Duty Line Vac, Light Duty Line Vac, Sanitary Flange Line Vac, Threaded Line Vac, FullStream, FloodStream, HollowStream, Standard Air Wipe, Super Ion Air Knife, Standard Ion Air Knife, Super Ion Air Wipe, Ion Air Cannon, Ion Air Gun, Ion Air Jet, Ionizing Point, Stay Set Ion Air Jet, Line Vac, Chip Vac, Heavy Duty Dry Vac, Heavy Duty HEPA Vac, Reversible Drum Vac, High Lift Reversible Drum Vac, Chip Trapper, High Lift Chip Trapper, Vac-u-Gun, Deep Hole Vac-u-Gun, Air Disk, Air Stik, Mini Cooler, Cold Gun Aircoolant System, and ETC are trademarks of EXAIR LLC.

EXAIR.com®
11510 Goldcoast Dr.
Cincinnati, Ohio 45249-1621
Phone Number: (513) 671-3322
Fax Number: (513) 671-3363
E-mail: techelp@exair.com
Web Site: www.exair.com

An INTELLIGENT COMPRESSED AIR® Product

Intelligent Compressed Air® products are identified throughout this catalog that can help your plant save tens of thousands of dollars over the course of a single year. *The Best Practices for Compressed Air Systems* manual published by the Compressed Air Challenge® recommends products like the Super Air Knife™, Super Air Amplifier™, and the family of Super Air Nozzles™ for energy conservation. Many of the products shown offer unique ways to solve common industrial problems using compressed air. Compressed Air Challenge is a registered trademark of Compressed Air Challenge, Inc.

Energy ENERGY STAR PARTNER

EXAIR has partnered with Energy Star, a voluntary program of the U.S. Department of Energy and the Environmental Protection Agency. Energy Star offers energy efficient solutions to help save money while protecting the environment for future generations. EXAIR has implemented improved energy management practices and technologies throughout our facility, including energy efficient lighting, HVAC systems, and electronic thermostats. EXAIR's participation in this program underscores our commitment to conserving energy.

EXAIR products are subject to ongoing development. Specifications are subject to change without notice.
Some products in this catalog are covered by U.S. Patent #5402938, #8153001, #8268179, #D903,817, #10,779,698 and #9156045, and others may be U.S. Patent Pending.
EU Regd. Des. No.00770318-0001 and No. 009025463-0001 Ⓓ Mexico No.60723; Canada No.194141, UK Registered Design No. 6211314

E-Vac® Vacuum Generators

Vacuums for lifting, clamping, mounting and placement!

What Is The E-Vac?

EXAIR's compressed air powered E-Vac single stage vacuum generators are the low cost way to create a vacuum for:

- Pick and place
- Clamping
- Lifting
- Chucking
- Alignment
- Surface mounting
- Vacuum forming

E-Vac compressed air powered vacuum pumps provide instantaneous response and are most commonly used for pick and place operations. They are available in a variety of sizes and flows for a wide range of applications.

Why The E-Vac?

The E-Vac vacuum generators have been engineered for high efficiency to minimize air consumption. These single stage, all aluminum units provide consistent, steady vacuum, unlike mechanical vacuum pumps. Dust and small particulates easily pass through the vacuum generator and they have no moving parts, making them maintenance free.

EXAIR's E-Vac Vacuum Generator is available in 2 styles:

In-Line E-Vac Vacuum Generator

In-Line E-Vac

These single stage, cylindrical units are compact and easy to mount at the point of use. They can be held in place by threading them directly onto a compressed air line or with the use of a mounting clip. There are 7 models available for use with porous materials, like cardboard, with vacuum levels up to 21" Hg (71 kPa) and vacuum flows up to 18.5 SCFM (524 SLPM). There are 7 models available for use with non-porous materials such as glass, with vacuum levels up to 27" Hg (91 kPa) with vacuum flows up to 15.8 SCFM (447 SLPM).

Adjustable E-Vac Vacuum Generator


Adjustable E-Vac

This series of vacuum generators permits easy adjustment by simply loosening the locknut and turning the exhaust to increase or decrease the level of vacuum and vacuum flow. This style is also an excellent choice where large particulate may be present and passed through the vacuum system. There are 4 models with adjustable vacuum up to 25" Hg (85 kPa) and vacuum flow up to 81 SCFM (2,294 SLPM).

Applications

- Pick and place parts and equipment
- Bag/package opening
- Label placement
- Vacuum forming
- Mold evacuation
- Vacuum filling
- Leak testing
- Evacuate containers
- Clamping and chucking
- Paper alignment and feed in printing equipment
- Vacuum packaging
- Surface mounting
- Vacuum press for wood veneers and laminates
- Carton forming
- Robotic tooling
- Vacuum liquids for testing

Advantages

- Compact, portable
- Single stage design eliminates fluctuations in vacuum
- Quiet
- Instantaneous vacuum
- Easy to mount at point of use
- Lightweight, rugged
- No moving parts – no maintenance
- 18 models
- Fast response – increases cycle time
- Durable 6061 aluminum construction
- Safe operation - no electricity

How to Build An E-Vac System:

1. Select the E-Vac type.

A. Determine if the part to be lifted is porous or non-porous (page 152 and 153).

B. Select a style - In-Line Low Vacuum, In-Line High Vacuum, or Adjustable (pages 152, 153 and 155). The E-Vac type determines max. vacuum available for lifting the part and vacuum cup selection.

Porous	low vacuum generators max. vacuum = 21" Hg (71 kPa)
Non-porous	high vacuum generators max. vacuum = 27" Hg (91 kPa)
Adjustable E-Vac	vacuum generators max. vacuum = 25" Hg (85 kPa)

Need Help Selecting the Correct E-Vac?

Our Application Engineers can assist you in determining the correct model E-Vac and vacuum cups (if required). Call 1-800-903-9247 or visit www.exair.com/appassist.htm

2. Determine the weight of the part.

3. Multiply the weight by the vacuum cup safety factor (see page 157) for the total vacuum cup capacity needed.

4. Determine the number of vacuum cups needed by considering the following:

A. How many cups are needed to distribute the weight for stable lifting and placement?

B. What is the weight that each vacuum cup can lift based on maximum vacuum available (E-Vac type)?

C. Select vacuum cups from chart on page 157 based on max. vacuum available (E-Vac type) and holding weight/cup.

5. To choose an E-Vac model number, consider the entire vacuum system from the E-Vac to the part.

A. Number of vacuum cups per E-Vac.

B. Length and size of vacuum tubing.

C. Vacuum cup size and type.

- The volume of air to evacuate from your vacuum system and the vacuum flow of the E-Vac you've selected (pages 152, 153 and 156) will determine the time it takes from E-Vac activation to vacuum cup holding the part. As the vacuum level in the system increases, the volume of evacuating air decreases.
- A lower volume of air in the vacuum system and/or a higher capacity (SCFM/SLPM) E-Vac will give faster pick-up times.
- An exact pick-up time cannot be calculated.
- If the E-Vac vacuum generator doesn't meet your needs, return it for a different model, with no restocking charge (U.S. and Canada only).

Here is an example using the steps outlined above:

A sheet of material measures 3' x 3' (.91m x .91m) and weighs 25 lbs (11.3kg). Each sheet is in a stack and will be placed on a conveyor.

If it is porous, like wood, and positioned vertically:

1. Choose a porous, low vacuum In-Line E-Vac. The maximum vacuum is 21" Hg (71 kPa).
2. The weight is 25 lbs (11.3kg).
3. If the part is picked-up and hung on an overhead conveyor vertically, the safety factor is 4. The vacuum cup capacity needed is 4 x 25 = 100 lbs (45.4kg).
4. Four vacuum cups will be used for stability when lifting the sheet. Each cup will need at least a 25 lb (11.3kg) capacity. In the table on page 157, at 21"Hg (71 kPa), the Model 900755 Vacuum Cup will hold up to 25.3 lbs (11.5kg).
5. Use 4 small round vacuum cups that are positioned close to one another. The vacuum system has a small to medium volume and pick-up and release time is not critical. To reduce the sound level, use the straight through muffler.

Order: (1) Model 800008M In-Line E-Vac
(4) Model 900755 Vacuum Cups

See Page 160 for other accessories.

If it is non-porous, like glass, and positioned horizontally:

1. Choose a non-porous, high vacuum In-Line E-Vac. The maximum vacuum is 27" Hg (91 kPa).
2. The weight is 25 lbs (11.3kg).
3. If the part is picked-up and placed on a belt conveyor horizontally, the safety factor is 2. The vacuum cup capacity needed is 2 x 25 = 50 lbs (22.7kg).
4. Four vacuum cups will be used for stability when lifting the sheet. Each cup will need at least a 12.5 lb (5.7kg) capacity. In the table on page 157, at 27" Hg (91 kPa), the Model 900754 Vacuum Cup will hold up to 20.8 lbs (9.4kg).
5. Use 4 small round vacuum cups that are positioned close to one another. The vacuum system has a small to medium volume and pick-up and release time is not critical. To reduce the sound level, use the straight through muffler.

Order: (1) Model 810006M In-Line E-Vac
(4) Model 900754 Vacuum Cups

See Page 160 for other accessories.

The Model 840008M Adjustable E-Vac can be substituted for picking up the wood or the glass since the vacuum level and vacuum flow is easily adjusted to suit the porous or non-porous application. The Adjustable E-Vac is especially useful for loads that vary.

Low Vacuum Generators For Porous Applications

Low vacuum units up to 21" Hg (71 kPa) with vacuum flows up to 18.5 SCFM (524 SLPM) are typically used for porous materials such as cardboard and delicate materials. The low level vacuum prevents any warping, marring, dimpling or disfiguring of the surface due to excessive vacuum. This style generates more vacuum flow to overcome porosity and leakage. There are 7 In-Line models that vary by flow and vacuum level.

Choose the E-Vac by the SCFM (SLPM) flow that best suits the performance needed for your application (*see Performance Table below*).

E-Vac Kits give you the ability to experiment with an assortment of vacuum cups. Kits include a muffler, an assortment of (4) pairs of vacuum cups (closely matched to the performance of that E-Vac), (2) straight, (2) elbow and (1) tee vacuum fittings, 10' (3m) of vacuum tubing and a mounting clip.

E-Vac Deluxe Kits include the same items as the standard kit with the addition of an automatic drain filter separator for the compressed air supply and pressure regulator (with coupler).

In-Line E-Vac Vacuum Generators for porous applications.

Create your own vacuum system!

In-Line E-Vac with Straight Through Muffler, push-in connectors, vacuum tubing and a round vacuum cup (shown).

In-Line E-Vac Low Vacuum Generators For Porous Applications	Model 1.5 SCFM 43 SLPM	Model 2.1 SCFM 60 SLPM	Model 3.1 SCFM 88 SLPM	Model 5.4 SCFM 153 SLPM	Model 8.4 SCFM 238 SLPM	Model 12.6 SCFM 357 SLPM	Model 16.8 SCFM 476 SLPM
In-Line E-Vac Only	800001	800002	800003	800005	800008	800013	800017
In-Line E-Vac with Straight Through Muffler	800001M	800002M	800003M	800005M	800008M	800013M	800017M
In-Line E-Vac Kit with Straight Through Muffler	801001M	801002M	801003M	801005M	801008M	801013M	801017M
In-Line E-Vac Deluxe Kit with Straight Through Muffler	802001M	802002M	802003M	802005M	802008M	802013M	802017M

Note: Replace 'M' with 'H' for Standard Muffler

In-Line E-Vac Low Vacuum Generator Performance (Porous)

In-Line E-Vac Model	Air Consumption SCFM @ 80 PSIG	SLPM @ 5.5 BAR	Sound Level in dBA			Vacuum Flow (SCFM/SLPM) vs. Vacuum Level ("Hg/ kPa)																	
			No Muffler	Standard Muffler	Straight Through Muffler	0		3/10		6/20		9/31		12/41		15/51		18/61		21/71		Max Vac	
800001	1.5	42.5	80	72	60	1.52	43.0	1.41	39.9	1.25	35.4	1.10	31.1	0.95	26.9	0.85	24.1	0.56	15.9	0.00	0.0	21	71
800002	2.1	59.5	80	72	63	2.22	62.9	2.05	58.0	1.91	54.1	1.77	50.1	1.45	41.1	0.95	26.9	0.56	15.9	0.00	0.0	21	71
800003	3.1	87.8	89	74	70	3.75	106.2	3.52	99.7	3.15	89.2	2.75	77.9	2.15	60.9	1.20	34.0	0.56	15.9	0.00	0.0	21	71
800005	5.4	152.9	92	83	66	5.59	158.3	5.23	148.1	4.51	127.7	3.75	106.2	3.34	94.6	2.51	71.1	1.25	35.4	0.00	0.0	21	71
800008	8.4	237.9	97	88	74	7.70	218.0	6.95	196.8	6.30	178.4	5.30	150.1	4.23	119.8	3.15	89.2	1.31	37.1	0.00	0.0	21	71
800013	12.6	356.8	99	91	78	15.50	438.9	14.50	410.6	13.15	372.4	11.35	321.4	8.70	246.3	4.03	114.1	0.00	0.0	0.00	0.0	18	61
800017	16.8	475.7	101	91	81	18.50	523.8	17.20	487.0	14.70	416.2	12.40	351.1	9.80	277.5	5.00	141.6	0.00	0.0	0.00	0.0	18	61

High Vacuum Generators For Non-Porous Applications

High vacuum units up to 27" Hg (91 kPa) with vacuum flows up to 15.8 SCFM (447 SLPM) are typically used for non-porous materials such as glass, steel sheet, and plastic. There are 7 In-Line models that vary by flow and vacuum level.

Choose the E-Vac by the SCFM (SLPM) flow that best suits the performance needed for your application (*see Performance Table below*).

E-Vac Kits give you the ability to experiment with an assortment of vacuum cups. Kits include a muffler, an assortment of (4) pairs of vacuum cups (closely matched to the performance of that E-Vac), (2) straight, (2) elbow and (1) tee vacuum fittings, 10' (3m) of vacuum tubing and a mounting clip.

E-Vac Deluxe Kits include the same items as the standard kit with the addition of an automatic drain filter separator for the compressed air supply and pressure regulator (with coupler).

EXAIR E-Vacs are available in other materials upon request. Contact an application engineer for an alternate material quote.

In-Line E-Vac Vacuum Generators for non-porous applications.

The In-Line E-Vac with Standard Muffler (shown above) is also available with your choice of accessories that can be found on page 160.

In-Line E-Vac High-Vacuum Generators For Non-Porous Applications	Model 2.3 SCFM 65 SLPM	Model 3.3 SCFM 93 SLPM	Model 6.2 SCFM 176 SLPM	Model 8.4 SCFM 238 SLPM	Model 13.2 SCFM 374 SLPM	Model 23.1 SCFM 654 SLPM	Model 30.8 SCFM 872 SLPM
In-Line E-Vac Only	810002	810003	810006	810008	810013	810023	810031
In-Line E-Vac with Straight Through Muffler	810002M	810003M	810006M	810008M	810013M	810023M	810031M
In-Line E-Vac Kit with Straight Through Muffler	811002M	811003M	811006M	811008M	811013M	811023M	811031M
In-Line E-Vac Deluxe Kit with Straight Through Muffler	812002M	812003M	812006M	812008M	812013M	812023M	812031M

Note: Replace 'M' with 'H' for Standard Muffler

In-Line E-Vac High Vacuum Generator Performance (Non-Porous)

In-Line E-Vac Model	Air Consumption SCFM @ 80 PSIG	Air Consumption SLPM @ 5.5 BAR	Sound Level in dBA: No Muffler	Sound Level in dBA: Standard Muffler	Sound Level in dBA: Straight Through Muffler	Vacuum Flow (SCFM/SLPM) vs. Vacuum Level ("Hg/ kPa): 0		3/10		6/20		9/31		12/41		15/51		18/61		21/71		24/81		27/91		Max Vac	
810002	2.3	65.1	86	81	70	1.22	34.5	1.16	33.0	1.00	28.3	0.90	25.5	0.87	24.6	0.74	21.0	0.56	16.0	0.46	13.0	0.20	5.7	0.00	0.0	27	91
810003	3.3	93.4	87	82	73	1.73	49.0	1.59	45.0	1.48	41.9	1.24	35.1	1.09	30.9	1.02	28.9	0.78	22.1	0.67	19.0	0.49	13.9	0.00	0.0	27	91
810006	6.2	175.6	91	82	77	2.75	78.0	2.65	75.0	2.26	64.0	2.05	58.0	1.87	53.0	1.59	45.0	1.13	32.0	0.92	26.0	0.77	21.7	0.00	0.0	27	91
810008	8.4	237.9	97	90	78	4.40	124.6	4.10	116.1	3.75	106.2	3.15	89.2	2.75	77.9	2.39	67.7	1.75	49.6	1.27	36.0	0.99	28.0	0.00	0.0	27	91
810013	13.2	373.8	100	92	83	6.85	194.0	6.50	184.1	5.81	164.5	4.89	138.5	4.12	116.7	3.51	99.4	2.61	73.9	1.92	54.4	1.31	37.1	0.00	0.0	27	91
810023	23.1	654.1	102	92	84	11.95	338.4	11.80	334.1	10.45	295.9	9.02	255.4	8.10	229.4	6.52	184.6	4.54	128.6	3.65	103.4	2.67	75.6	0.00	0.0	27	91
810031	30.8	872.1	105	92	87	15.75	446.0	15.25	431.8	12.67	358.8	11.12	314.9	10.25	290.2	7.97	225.7	5.98	169.3	5.04	142.7	3.41	96.6	0.00	0.0	27	91

E-Vac® Vacuum Generators

In-Line E-Vacs

EXAIR manufactures two versions of the In-Line E-Vac – Low Vacuum and High Vacuum. The application will dictate which type of vacuum is most suitable. The dimensions and performance for each model are shown.

How The In-Line E-Vac Works

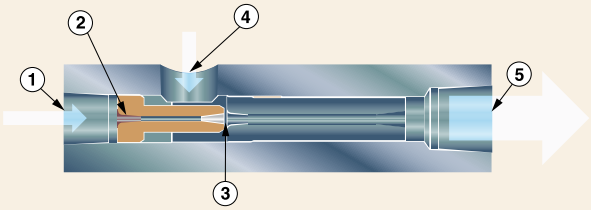

Compressed air flows through the inlet (1), then through a single directed nozzle (2). As the airstream exhausts, it expands and increases in velocity prior to passing through the venturi (3). A vacuum inlet tangential to the primary airflow (4) is located at the suction point between the orifice and the venturi. The airflow that is drawn through the vacuum inlet mixes with the primary airstream, then exhausts on the opposite end (5).

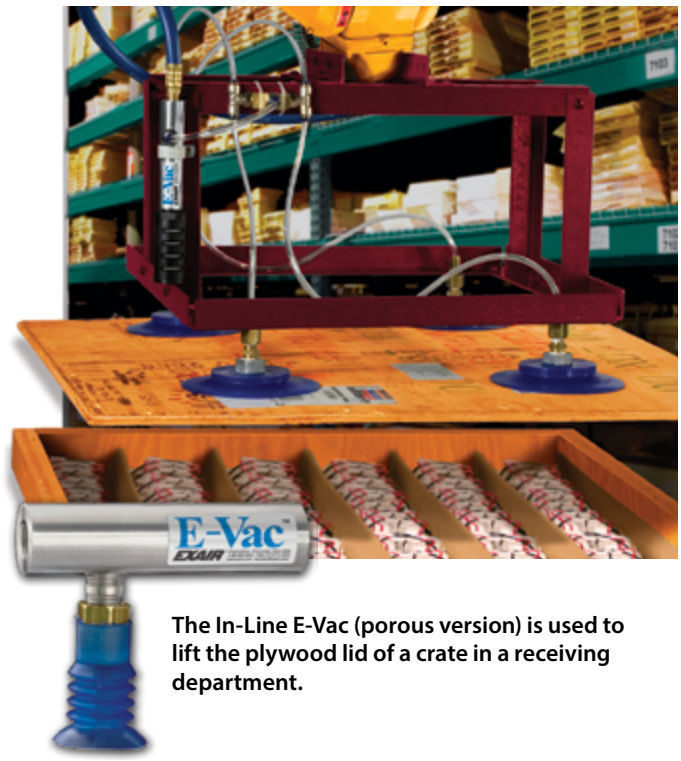

The In-Line E-Vac (porous version) is used to lift the plywood lid of a crate in a receiving department.

Need Help Selecting the Correct E-Vac?

Not sure how much vacuum is required for your application? Our Application Engineers can assist you in determining the correct model E-Vac and vacuum cups (if required). Call 1-800-903-9247 or visit www.exair.com/appassist.htm

In-Line E-Vac Dimensions

DOWNLOAD drawings at EXAIR.com

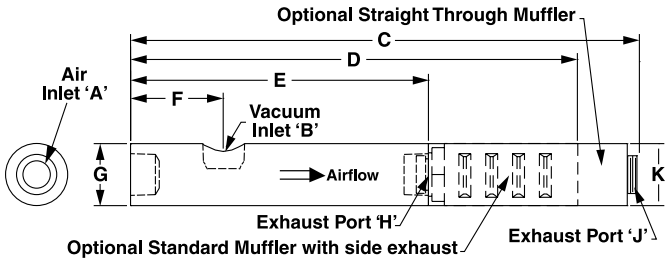

In-Line Vacuum Generator Dimensions

Model	Air Inlet A	Vacuum Inlet B		C	D	E	F	G	H	J	K
800001, 800002, 800003, 810002, 810003, 810006	1/8 NPT	1/8 NPT	in	N/A	N/A	3.00	0.88	0.75	1/4 NPT	N/A	N/A
			mm	N/A	N/A	76	22	19		N/A	N/A
800001H, 800002H, 800003H, 810002H, 810003H, 810006H	1/8 NPT	1/8 NPT	in	N/A	5.00	3.00	0.88	0.75	1/4 NPT	N/A	0.81
			mm	N/A	127	76	22	19		N/A	21
800001M, 800002M, 800003M, 810002M, 810003M, 810006M	1/8 NPT	1/8 NPT	in	5.25	N/A	3.00	0.88	0.75	1/4 NPT	1/4 NPS	0.75
			mm	133	N/A	76	22	19		1/4 NPS	19
800005, 800008, 810008, 810013	1/4 NPT	3/8 NPT	in	N/A	N/A	4.50	1.50	1.00	3/8 NPT	N/A	N/A
			mm	N/A	N/A	114	38	25		N/A	N/A
800005H, 800008H, 810008H, 810013H	1/4 NPT	3/8 NPT	in	N/A	7.50	4.50	1.50	1.00	3/8 NPT	N/A	1.25
			mm	N/A	191	114	38	25		N/A	32
800005M, 800008M, 810008M, 810013M	1/4 NPT	3/8 NPT	in	7.75	N/A	4.50	1.50	1.00	3/8 NPT	3/8 NPS	1.00
			mm	197	N/A	114	38	25		3/8 NPS	25
800013, 800017, 810023, 810031	1/2 NPT	1/2 NPT	in	N/A	N/A	6.00	1.88	1.25	1/2 NPT	N/A	N/A
			mm	N/A	N/A	152	48	32		N/A	N/A
800013H, 800017H, 810023H, 810031H	1/2 NPT	1/2 NPT	in	N/A	9.00	6.00	1.88	1.25	1/2 NPT	N/A	1.25
			mm	N/A	229	152	48	32		N/A	32
800013M, 800017M, 810023M, 810031M	1/2 NPT	1/2 NPT	in	10.25	N/A	6.00	1.88	1.25	1/2 NPT	1/2 NPS	1.25
			mm	260	N/A	152	48	32		1/2 NPS	32

Adjustable E-Vac® Vacuum Generators

A simple turn can increase or decrease vacuum and flow!

What Is The Adjustable E-Vac?

EXAIR's Adjustable E-Vac is a series of low cost, compressed air powered vacuum generators where the vacuum and flow rates can be easily adjusted to suit the application requirements. These vacuum pumps are ideal for a wide variety of pick and place, box opening, clamping, lifting, chucking, and surface mounting applications. They are maintenance free and have no moving parts to wear out.

Why The Adjustable E-Vac?

Engineered for high efficiency, the Adjustable E-Vac minimizes compressed air use by allowing it to be tuned to the application. With a simple turn of the unit, the vacuum and flow levels can be changed to overcome porosity and increase or decrease the lifting power. The straight-through, single stage aluminum construction requires no vacuum filter and simply passes contaminants from dirty environments through the unit so there is no clogging or loss of suction.

Adjustable E-Vac is available in 4 sizes that have adjustable vacuum rates up to 25" Hg (85 kPa) and flow rates up to 81 SCFM (2,294 SLPM). Kit configurations that include vacuum cups, fittings, tubing and a mounting clip are available.

The vacuum level of the Adjustable E-Vac can quickly be changed from lifting lightweight pavers to heavy cement blocks.

Adjustable E-Vac Dimensions

DOWNLOAD drawings at EXAIR.com

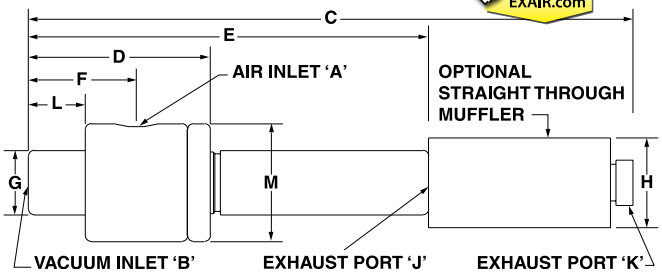

How The Adjustable E-Vac Works

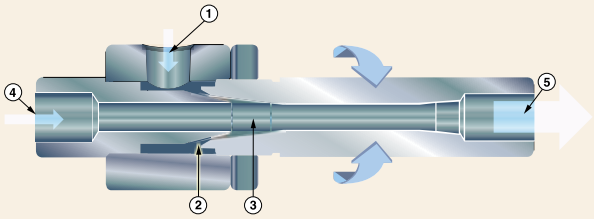

Compressed air flows through the inlet (1), then through an adjustable annular nozzle (2). As the airstream enters the vacuum flow, it expands and increases in velocity (3). A vacuum flow is induced, creating suction (4). The airflow that is drawn through the vacuum inlet mixes with the primary airstream, then exhausts on the opposite end (5).

Adjustable Vacuum Generator Dimensions

Model	Air Inlet A	Vacuum Inlet B		C	D	E	F	G	H	L	M	Exhaust Port J	Exhaust Port K
840008	1/8 NPT	1/4 NPT	in	N/A	2.00	4.38	1.19	0.72	N/A	0.63	1.31	1/4 NPT	N/A
			mm	N/A	51	111	30	18	N/A	16	33		
840008M	1/8 NPT	1/4 NPT	in	6.63	2.00	4.38	1.19	0.72	0.75	0.63	1.31	1/4 NPT	1/4 NPS
			mm	168	51	111	30	18	19	16	33		
840015	3/8 NPT	1/2 NPT	in	N/A	2.38	5.44	1.31	0.97	N/A	0.63	1.56	1/2 NPT	N/A
			mm	N/A	60	138	33	25	N/A	16	40		
840015M	3/8 NPT	1/2 NPT	in	9.69	2.38	5.44	1.31	0.97	1.25	0.63	1.56	1/2 NPT	1/2 NPS
			mm	246	60	138	33	25	32	16	40		
840030	3/8 NPT	1/2 NPT	in	N/A	2.50	6.19	1.44	1.22	N/A	0.75	1.94	3/4 NPT	N/A
			mm	N/A	64	157	37	31	N/A	19	49		
840030M	3/8 NPT	1/2 NPT	in	13.63	2.50	6.19	1.44	1.22	2.00	0.75	1.94	3/4 NPT	3/4 NPS
			mm	346	64	157	37	31	51	19	49		
840060	1/2 NPT	3/4 NPT	in	N/A	2.75	6.50	1.56	1.47	N/A	0.75	2.19	1 NPT	N/A
			mm	N/A	70	165	40	37	N/A	19	56		
840060M	1/2 NPT	3/4 NPT	in	13.94	2.75	6.50	1.56	1.47	2.00	0.75	2.19	1 NPT	1 NPS
			mm	354	70	165	40	37	51	19	56		

Adjustable E-Vac Vacuum Generators

Choose the Adjustable E-Vac by the SCFM (SLPM) flow that best suits the performance needed for your application (*see Performance Table below*).

Adjustable E-Vac Kits give you the ability to experiment with an assortment of vacuum cups. E-Vac Kits include a muffler, an assortment of (4) pairs of vacuum cups (closely matched to the performance of that E-Vac), (2) straight, (2) elbow and (1) tee vacuum fittings, 10' (3m) of vacuum tubing and a mounting clip.

Adjustable E-Vac Deluxe Kits include the same items as the standard kit with the addition of an automatic drain filter separator for the compressed air supply and pressure regulator (with coupler).

Adjustable E-Vac Vacuum Generators have vacuum levels up to 25" Hg (85 kPa) that can be used with porous and non-porous materials.

Adjustable E-Vac Performance

The amount of vacuum created varies with the porosity of the load being picked up. Units come from the factory set to 15" Hg (51 kPa). A maximum of 25" Hg (85 kPa) can be achieved on a solid, non-porous surface, but will require increasing the air consumption and vacuum flow.

Adjustable E-Vac	Model 8.2 SCFM 232 SLPM	Model 15.4 SCFM 436 SLPM	Model 26.4 SCFM 748 SLPM	Model 62.7 SCFM 1,775 SLPM
Adjustable E-Vac Only	840008	840015	840030	840060
Adjustable E-Vac with Straight Through Muffler	840008M	840015M	840030M	840060M
Adjustable E-Vac Kit with Straight Through Muffler	841008M	841015M	841030M	841060M
Adjustable E-Vac Deluxe Kit with Straight Through Muffler	842008M	842015M	842030M	842060M

Adjustable Vacuum Generator Performance (15" Hg/ 51 kPa)

Model	Air Consumption SCFM @ 80 PSIG	Air Consumption SLPM @ 5.5 BAR	Sound Level in dBA		Vacuum Flow (SCFM/SLPM) vs. Vacuum Level ("Hg / kPa) (Set to 15" Hg/51 kPa)											
			No Muffler	Straight Through Muffler	0		3/10		6/20		9/31		12/41		15/51	
840008	8.2	232.2	89	77	5.80	164.2	4.68	132.6	3.71	105.0	2.59	73.4	1.53	43.2	0.0	0.0
840015	15.4	436.1	95	77	18.70	529.5	16.00	453.1	12.02	340.3	7.75	219.4	4.05	114.7	0.0	0.0
840030	26.4	747.5	99	74	36.70	1039.2	32.00	906.1	25.63	725.8	17.68	500.5	7.69	217.8	0.0	0.0
840060	62.7	1775.4	107	85	81.00	2293.6	67.00	1897.2	56.33	1595.1	29.00	821.2	11.13	315.3	0.0	0.0

Adjustable Vacuum Generator Performance (25" Hg/ 85 kPa)

Model	Air Consumption SCFM @ 80 PSIG	Air Consumption SLPM @ 5.5 BAR	Sound Level in dBA		Vacuum Flow (SCFM/SLPM) vs. Vacuum Level ("Hg / kPa) (Set to 25" Hg/85 kPa)																			
			No Muffler	Straight Through Muffler	0		3/10		6/20		9/31		12/41		15/51		18/61		21/71		24/81		25/85	
840008	12.2	345.5	104	89	5.80	164.2	5.58	157.9	5.18	146.5	4.80	135.9	4.33	122.5	3.83	108.3	2.94	83.2	1.93	54.5	0.37	10.5	0.0	0.0
840015	25.9	733.4	107	89	18.00	509.7	16.53	467.9	15.70	444.6	14.18	401.4	12.13	343.3	8.98	254.1	5.65	160.0	2.69	76.1	0.55	15.6	0.0	0.0
840030	44.8	1268.6	107	82	32.00	906.1	29.00	821.2	26.83	759.8	24.12	682.9	20.92	592.3	14.63	414.1	9.90	280.3	6.13	173.7	1.19	33.8	0.0	0.0
840060	105.2	2978.8	114	92	70.00	1982.1	66.33	1878.3	62.33	1765.0	55.50	1571.5	45.00	1274.2	30.67	868.4	18.37	520.1	8.38	237.4	2.10	59.5	0.0	0.0

Compressed air use is minimized by selecting the exact vacuum level required to lift the heavy, porous cardboard cartons.

A series of bellows cups lift one plastic part at a time off of a pallet.

Choosing A Suitable Vacuum Cup

Round Cups are best suited to smooth, flat surfaces. They will grip and release quickly. These cups hold their shape with extended use and grip well to vertical surfaces. Round cups with cleats are better at lifting heavy loads. Cups without cleats can be used for light lifting.

Oval Cups provide the most vacuum due to the larger surface area. They provide more vacuum power than round cups and are suited to lifting heavy loads. They are designed to handle flat rigid sheet materials like wood, glass, cardboard boxes and composites.

Bellows Cups are best suited to textured, uneven surfaces. The folds, called convolutions, provide a collapsible area that allows the cup to quickly compress when it touches the uneven surface. The attach and release time is greater due to the significant volume of the cup.

Vacuum Cup Safety Factor

A safety factor of 2 is recommended when the vacuum cup is positioned horizontally.

A safety factor of 4 is recommended when the vacuum cup is positioned vertically.

Some companies or local codes may require a specific safety factor.

Using The Tables Below

Determine the weight of the part to be lifted. Multiply it by the safety factor of (2) when the cup will be positioned horizontally, or by (4) when positioned vertically.

Using the table below, look through the numbers highlighted in orange for the weight capacity per vacuum cup. Use enough vacuum cups to distribute the weight evenly for stable lifting and placement. The model number(s) for the vacuum cup(s) that can handle that weight are directly above (in that column) and are highlighted in blue. Details for each vacuum cup can be found on page 158.

To the left of the vacuum cup weight you've selected (in that same row) is the vacuum level highlighted in green that is needed. Performance data for the In-Line E-Vacs designed for specific vacuum levels can be found on pages 152-153. For loads that vary, Adjustable E-Vacs are the best choice (performance shown on page 155).

Weight in lbs that a vacuum cup can hold at a given vacuum

Vacuum Cup Models		900762 900766	900752 900767	900763	900764	900753 900768	900754 900769	900765	900755 900770	900756 900757 900758 900771	900759	900760	900761
Area of cup in²		0.4	0.8	1.0	1.5	1.8	3.1	4.4	4.9	8.3	14.2	19.6	28.3
Vacuum "Hg	5	0.5	1.0	1.2	1.8	2.2	3.9	5.3	6.0	10.2	17.4	24.1	34.7
	10	1.0	1.9	2.5	3.7	4.3	7.7	10.7	12.1	20.4	34.8	48.2	69.4
	15	1.5	2.9	3.7	5.5	6.5	11.6	16.0	18.1	30.6	52.3	72.3	104.2
	20	2.1	3.9	4.9	7.4	8.7	15.4	21.4	24.1	40.7	69.7	96.4	138.9
	21	2.2	4.1	5.2	7.8	9.1	16.2	22.4	25.3	42.8	73.2	101.3	145.8
	27	2.8	5.2	6.6	10.0	11.7	20.8	28.9	32.6	55.0	94.1	130.2	187.5

Weight in kilograms that a vacuum cup can hold at a given vacuum

Vacuum Cup Models		900762 900766	900752 900767	900763	900764	900753 900768	900754 900769	900765	900755 900770	900756 900757 900758 900771	900759	900760	900761
Area of cup cm²		3	5	6	10	11	20	28	32	54	92	127	182
Vacuum kPa	17	0.2	0.4	0.6	0.8	1.0	1.7	2.4	2.7	4.6	7.9	10.9	15.7
	34	0.5	0.9	1.1	1.7	2.0	3.5	4.8	5.5	9.2	15.8	21.9	31.5
	51	0.7	1.3	1.7	2.5	3.0	5.2	7.3	8.2	13.9	23.7	32.8	47.2
	68	0.9	1.7	2.2	3.4	3.9	7.0	9.7	10.9	18.5	31.6	43.7	63.0
	71	1.0	1.8	2.3	3.5	4.1	7.3	10.2	11.5	19.4	33.2	45.9	66.1
	91	1.3	2.4	3.0	4.5	5.3	9.4	13.1	14.8	25.0	42.7	59.1	85.0

Vacuum Cup Dimensions

EXAIR vacuum cups are vinyl. They are ideal for general purpose applications and provide excellent resistance to wear. The Durometer rating (used to indicate the flexibility and stiffness of the cup) is A50. Temperature range is 32° to 125°F (0° to 52°C).

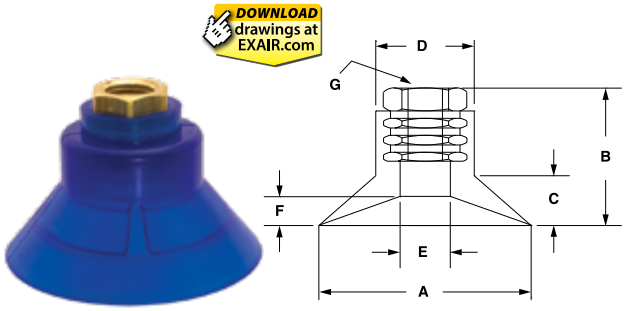

Small Round

Vacuum Cups - Small Round									
Model		A	B	C	D	E	F	G	Cleats
900752	in	1.00	1.12	0.25	0.81	0.45	0.17	1/4 FNPT	No
	mm	25	28	6	21	11	4		
900753	in	1.50	0.90	0.28	1.25	1.06	0.12	1/4 FNPT	Yes
	mm	38	23	7	32	27	3		
900754	in	2.00	1.00	0.25	1.56	1.31	0.18	1/4 FNPT	Yes
	mm	51	25	6	40	33	5		
900755	in	2.50	1.80	0.72	1.35	0.95	0.62	1/4 FNPT	Yes
	mm	64	46	18	34	24	16		
900756	in	3.50	1.10	0.56	0.98	0.51	0.37	1/4 FNPT	No
	mm	89	28	14	25	13	9		

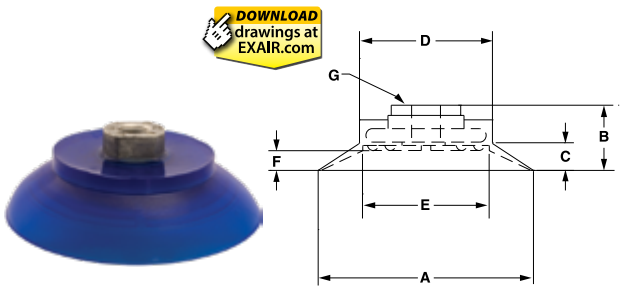

Large Round

Vacuum Cups - Large Round									
Model		A	B	C	D	E	F	G	Cleats
900757	in	3.25	1.15	0.50	2.23	1.87	0.37	3/8 FNPT	Yes
	mm	83	29	13	57	47	9		
900758	in	3.25	1.15	0.50	2.23	1.87	0.37	1/4 FNPT	Yes
	mm	83	29	13	57	47	9		
900759	in	4.25	1.18	0.50	2.75	2.43	0.37	3/8 FNPT	Yes
	mm	108	30	13	70	62	9		
900760	in	5.00	1.75	1.12	3.25	2.65	0.62	3/8 FNPT	Yes
	mm	127	44	28	83	67	16		
900761	in	6.00	1.31	0.50	4.75	4.90	0.12	1/2 FNPT	Yes
	mm	152	33	13	121	124	3		

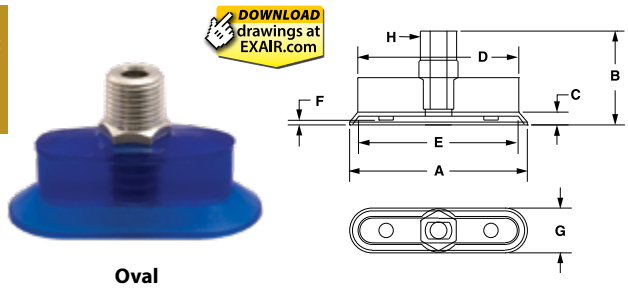

Oval

Vacuum Cups - Oval										
Model		A	B	C	D	E	F	G	H	Cleats
900762	in	1.00	1.06	0.12	0.81	0.76	0.09	0.50	1/8 MNPT	No
	mm	25	27	3	21	19	2	13		
900763	in	2.00	1.06	0.12	1.81	1.76	0.09	0.50	1/8 MNPT	No
	mm	51	27	3	46	45	2	13		
900764	in	1.73	1.03	0.21	1.35	1.21	0.09	0.87	1/8 MNPT	Yes
	mm	44	26	5	34	31	2	22		
900765	in	2.96	0.93	0.19	0.92	2.34	0.20	1.47	1/8 FNPT	No
	mm	75	24	5	23	59	5	37		

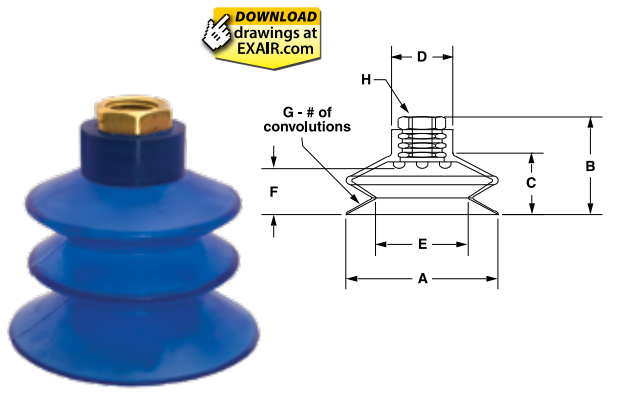

Bellows

Vacuum Cups - Bellows										
Model		A	B	C	D	E	F	G	H	Cleats
900766	in	0.73	1.43	0.75	0.67	0.45	0.79	3	1/4 FNPT	No
	mm	19	36	19	17	11	20			
900767	in	1.00	1.48	0.85	0.56	0.44	0.85	4	1/8 FNPT	No
	mm	25	38	22	14	11	22			
900768	in	1.50	1.12	0.71	1.06	1.00	0.31	1	1/4 FNPT	Yes
	mm	38	28	18	27	25	8			
900769	in	2.00	1.54	0.89	1.00	1.17	0.68	1	1/4 FNPT	Yes
	mm	51	39	23	25	30	17			
900770	in	2.50	2.40	1.75	1.00	1.12	1.80	2	1/4 FNPT	No
	mm	64	61	44	25	28	46			
900771	in	3.25	3.00	2.20	1.00	1.53	2.00	2	3/8 FNPT	No
	mm	83	76	56	25	39	51			

MNPT = NPT Male
FNPT = NPT Female

Increased Energy And Vacuum Efficiency

Energy and vacuum efficiency are not limited to the Adjustable E-Vac vacuum generators. All E-Vac styles and models can offer significant improvements when looking to reduce the amount of compressed air used for a specific vacuum application. Once the appropriate amount of vacuum and flow for the application are determined, it is important to select the appropriate model that will deliver the best performance while using the least amount of compressed air that it takes to do the job.

Many companies have a centralized vacuum system where the vacuum is generated at a location that is far away from the point of use. The long runs of piping through the plant produce line loss and it is often difficult to obtain that perfect balance of vacuum and flow required for an application. The compact, In-line E-Vac vacuum generators eliminate this problem since they can be mounted at the point where the vacuum source is needed. EXAIR's Application Engineers can help you to select the E-Vac vacuum generator and vacuum cups that provide the right amount of lifting capability while minimizing the amount of compressed air usage.

Other Applications For E-Vac

E-Vacs are used in many other "non-lifting" applications. They are commonly used for vessel evacuation, clamping, chucking, and other work holding applications. Many types of automated equipment use vacuum to evacuate, grip, hold, align and insert parts. These vacuums can be used for surface mounting, vacuum packaging, bag opening, label placement, carton forming and container evacuation.

Another popular application is using the E-Vac for liquid sampling. This process can easily be accomplished using an E-Vac vacuum generator attached to a liquid holding tube. When the tube is dipped into a vat, tank or container, the compressed air is turned on so it draws a specific volume of liquid up into the tube. When the compressed air is turned off, the liquid flows from the tube and can be dispensed into a container or machine to be analyzed.

Accessories Needed To Build Your Vacuum System

EXAIR offers a variety of mufflers, tubing, check valves, and fittings, shown on page 160, that make it easy to build a vacuum system best suited to your vacuum application.

When using E-Vac vacuum generators, it is important to use a source of clean, dry compressed air that will keep them operating at their peak performance. Automatic drain filter separators to keep the compressed air free of contaminants and moisture can be found on page 231. Oil removal filters that remove oil particulates that are common to many compressed air systems are also shown. Pressure regulators, shutoff valves, compressed air hose, and solenoid valves (to electrically turn the compressed air on and off) can be found on pages 231 through 236.

- **Mufflers**

  Optional silencing mufflers are available that permit maximum exhaust of the E-Vac unit so cycle speed is not reduced. The Standard Muffler (for use with In-Line E-Vacs only) has a closed end and is suitable for applications that are free of dust and debris. The Straight Through Muffler is recommended where particulates are present since it will not accumulate debris that can erode performance. Straight Through Mufflers offer the best sound level reduction (up to 26 dBA). Sound levels are shown on pages 152, 153 and 156.

- **Fittings and Tubing**

  The vacuum port of the E-Vac has an NPT thread (a vacuum cup can be threaded directly into it). For vacuum cups that are remotely located, push-in connector fittings (most have global threads for use with NPT and BSP), or hose barb fittings can be installed on the E-Vac and the vacuum cup. Polyurethane vacuum tubing is available (10', 20', 30', 40' and 50' lengths) to connect them. For best performance, the length of the tubing should be minimized to achieve the best attach and release times.

- **Check Valve**

  A vacuum check valve is available to hold the vacuum in case of compressed air loss. E-Vac vacuum generators that are used without a check valve will release the load if there is a significant drop in compressed air pressure or the supply of compressed air is lost.

E-Vac® Vacuum Generators

Mufflers

Model #	Description	Thread
Standard		
900800	Standard Muffler	1/4 MNPT
900801	Standard Muffler	3/8 MNPT
900802	Standard Muffler	1/2 MNPT
Straight Through		
Model #	**Description**	**Thread**
890001	Straight Through	1/4 MNPS
890002	Straight Through	3/8 MNPS
890003	Straight Through	1/2 MNPS
890004	Straight Through	3/4 MNPS
890005	Straight Through	1 MNPS

Check Valves

Model #	Description	Thread
900804	Check Valve	1/4 FNPT
900805	Check Valve	3/8 FNPT
900806	Check Valve	1/2 FNPT

E-Vac Accessories

Model #	Description
Push-In Connector	
900773	1/4 Tube x 1/8 FNPT
900774	1/4 Tube x 1/8 Male Global Thread
900775	1/4 Tube x 1/4 Male Global Thread
900776	1/4 Tube x 3/8 Male Global Thread
900777	3/8 Tube x 1/8 Male Global Thread
900778	3/8 Tube x 1/4 Male Global Thread
900779	3/8 Tube x 3/8 Male Global Thread
900780	3/8 Tube x 1/2 Male Global Thread
Push-In Swivel Elbow Connector	
Model #	**Description**
900781	1/4 Tube x 1/8 Male Global Thread
900782	1/4 Tube x 1/4 Male Global Thread
900783	1/4 Tube x 3/8 Male Global Thread
900784	3/8 Tube x 1/8 Male Global Thread
900785	3/8 Tube x 1/4 Male Global Thread
900786	3/8 Tube x 3/8 Male Global Thread
900787	3/8 Tube x 1/2 Male Global Thread
Push-In Swivel Branch Tee Connector	
Model #	**Description**
900788	1/4 Tube x 1/8 Male Global Thread
900789	1/4 Tube x 1/4 Male Global Thread
900790	3/8 Tube x 1/4 Male Global Thread
900791	3/8 Tube x 3/8 Male Global Thread

MNPT = NPT Male
FNPT = NPT Female

E-Vac Accessories - continued

Model #	Description
Push-In Bulkhead Connector	
Model #	**Description**
900792	Female Union - 1/4 Tube x 1/4 Tube
900793	Female Union - 3/8 Tube x 3/8 Tube
900809	Female Union - 1/4 Tube x 1/4 NPT
900810	Female Union - 3/8 Tube x 1/4 NPT

Vacuum Tubing

Tubing lengths are 10', 20', 30', 40', and 50'. Select the tubing model number (diameter) and indicate the length with a dash. Example: A Model 900795-20 is 1/4" tubing x 20' long.

Model #	Description
900795-	1/4" O.D. Polyurethane Tubing
900796-	3/8" O.D. Polyurethane Tubing

Mounting Clip

Model #	Description
900798	Mounting Clip with Strap

Hose Barbs

Model #	Description
900969	1/4 MNPT x 1/4 Hose Barb
900970	1/4 MNPT x 3/8 Hose Barb
900971	1/4 MNPT x 1/2 Hose Barb
900972	1/2 MNPT x 1/4 Hose Barb
900973	1/2 MNPT x 3/8 Hose Barb
900974	1/2 MNPT x 1/2 Hose Barb
900975	1/2 MNPT x 3/4 Hose Barb
900976	3/4 MNPT x 3/8 Hose Barb
900977	3/4 MNPT x 1/2 Hose Barb
900978	3/4 MNPT x 3/4 Hose Barb
900979	3/4 MNPT x 1 Hose Barb
900980	1 MNPT x 3/4 Hose Barb
900981	1 MNPT x 1 Hose Barb

Hose

Hose lengths are 10', 20', 30', 40', and 50'. Select the hose model number (diameter) and indicate the length with a dash. Example: A Model 901845-20 is 1/4" hose x 20' long.

Model #	Description
901845-	1/4" I.D. Hose
900689-	3/8" I.D. Hose
900690-	1/2" I.D. Hose
900063-	3/4" I.D. Hose
900064-	1" I.D. Hose

Vacuum Gauge

Model #	Description	Thread
900811	Vacuum Gauge (-30" Hg/-1 BAR/-100 kPa-0)	1/8 MNPT

MNPT = NPT Male
FNPT = NPT Female

Standards Compliance

As the leader in standards compliance, EXAIR's products come with more than engineered performance, peak efficiency, the best technical knowledge and unmatched customer service…

EXAIR is dedicated to providing products that have been manufactured to meet the strict requirements of the following standards. These standards provide confidence that you are receiving reliable, high quality products which will perform as stated within the performance charts provided.

Our products meet or exceed the strict safety standards of OSHA and the European Union to ensure the safety of your personnel. Many of these standards will allow your products a smoother transaction when selling your products into international markets.

OSHA and CE Compliance:

EXAIR compressed air products comply with OSHA's Safety Requirements (29 CFR 1910.242(b)), the EU General Product Safety Directive (2001/95/EC) and meet the noise limitation requirements (29 CFR-1910.95(a)), of the EU Machinery Directive (2006/42/EC). EXAIR's Electronic Flow Control and Electronic Temperature Control meet the low voltage standards of the EU Low Voltage Directive (2006/95/EC). Some EXAIR products display the CE mark where there are applicable directives. All sound level measurements are taken at 3 feet from product.

RoHS:

Electrical portions of EXAIR's Static Eliminators, EFC, ETC, Digital Flowmeter solenoid valves, and thermostats comply with the RoHS (Restriction of Hazardous Substances) Directive 2011/65/EU, including the amendment outlined in the European Commission decision L 214/65.

Conflict Mineral Free:

Look for this symbol to designate conflict mineral free products throughout our catalog. EXAIR supports Section 1502 of the Dodd-Frank Wall Street Reform and Consumer Protection Act. We are committed to compliance with the conflict minerals rule in order to curb the illicit trade of tin, tantalum, tungsten and gold in the DRC region. EXAIR is using the CMRT 4.20 template to document our supply chain and commitment to conflict free products.

Reach:

Per Regulation (EC) No 1907/2006 Title I, Article 3, paragraph 3, the European Union has recently enacted legislation to register chemicals and substances imported into the EU to ensure a high level of protection of human health and the environment.

Per Title II, Article 7, paragraph 1, articles (products) must be registered when a substance is intended to be released under normal or reasonably foreseeable conditions of use and it is present in those articles in quantities totaling over 1 metric ton per producer or importer per year. Registration of EXAIR products is not required since they do not contain substances that are intentionally released.

Best Practices for Using EXAIR® Intelligent Compressed Air™ Products

In order to achieve the best performance of your EXAIR Intelligent Compressed Air Product, a steady flow of compressed air must be supplied at the optimal pressure. Compressor output pressure, air flow rate, piping ID (inner diameter), the smoothness of the inside of the pipe, and connector type all contribute to the performance.

Air Compressor Capability

Especially for manufacturing uses, it is important to consider both the air pressure and air flow being produced by the air compressor providing the supply for all tooling. It is possible for an air compressor to produce sufficient supply pressure for an EXAIR product while not having adequate air flow to use the product for very long!

Air Pressure

The optimal operating pressure for most EXAIR products is 80 PSIG, with the exception of Vortex Tube based products, which are rated at 100 PSIG. Operating EXAIR products at air pressures less than 80 PSIG may lead to lower performance, but EXAIR encourages operating any blowoff product at as low a pressure as possible to achieve your desired result. A simple pressure regulator can lower your pressure and save energy. As a general rule near the 100 PSIG level, lowering air pressure by 2 PSIG will save 1% of energy used by an air compressor. Operating the product at pressures greater than 80 PSIG may produce slightly higher performance, but will require more energy to produce only a small gain.

Connectors and Fittings

Make sure that connectors and fittings do not restrict compressed air flow in any manner. Quick connectors can be especially problematic in this area. Because of their construction, quick connections that are rated at the same size as the incoming pipe or hose may actually have a much smaller inner diameter than that associated pipe or hose. This will significantly restrict the amount of air that is being supplied to the tool, starving it of the air flow it needs for best performance. In some cases, if the fitting is too small, the tool may not work at all!

In most cases we do not recommend any of the fittings numbered 1-5. Our minimum recommendation is represented in numbers 6-9

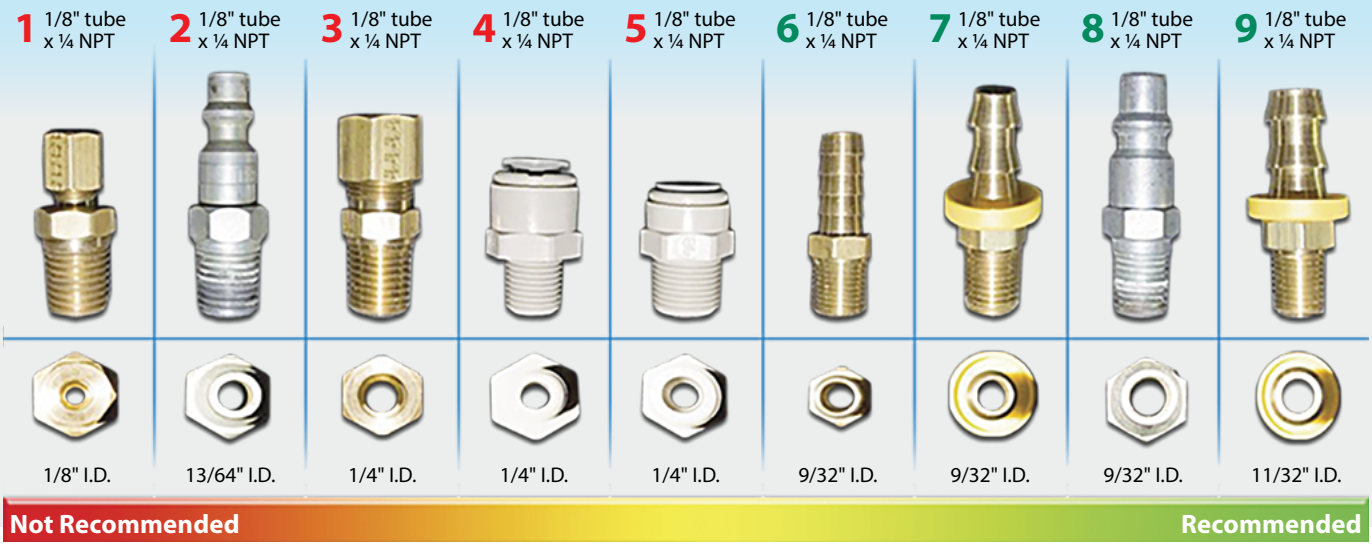

Best Practices for Using EXAIR® Intelligent Compressed Air™ Products

continued

Proper Air Pipe Sizing

In addition to all of the items above, it is also important to select the proper compressed air pipe size from the compressor to the point of use. Because the inside of a pipe is not perfectly smooth, the volume of air will become more restricted as it passes through a greater distance, thus reducing the available pressure at the point of use. To compensate for this loss, a larger diameter pipe is needed for a longer run. The table below shows the typical pressure loss in pounds per square inch for 100 feet of 1" Schedule 40 pipe. For lengths other than 100 feet, the pressure drop is proportional to the ratio of difference in lengths. For instance, the pressure drop in 50 feet of pipe will be approximately one-half the value on the table.

1" Schedule 40 Pipe - 1.049 actual I.D.								
Free Air (SCFM)	Line Pressure (PSIG)							
	40	50	60	70	80	90	100	110
50	1.66	1.33	1.11	0.95	0.83	0.75	0.66	0.60
60	2.33	1.86	1.55	1.33	1.16	1.03	0.93	0.85
70	3.09	2.47	2.06	1.77	1.55	1.37	1.24	1.12
80	3.96	3.17	2.64	2.26	1.98	1.76	1.58	1.44
90	4.92	3.94	3.28	2.81	2.46	2.19	1.97	1.79
100	5.98	4.79	3.99	3.42	2.99	2.66	2.39	2.18
125	9.04	7.23	6.03	5.17	4.52	4.02	3.62	3.29
150	-	10.13	8.44	7.24	6.33	5.63	5.07	4.61
175	-	-	-	9.63	8.42	7.49	6.74	6.13
200	-	-	-	-	10.78	9.59	8.63	7.84
225	-	-	-	-	-	-	10.73	9.75

How to Calculate Compressed Air Consumption

Method 1

Air consumption is directly proportional to absolute inlet pressure

$$\frac{SCFM_2}{SCFM_1} = \frac{P_2 + 1 \text{ atmosphere}}{P_1 + 1 \text{ atmosphere}}$$

Example: A Model 3215 Vortex Tube consumes 15 SCFM at 100 PSIG (425 SLPM @ 6.9 BAR). To calculate the airflow with an inlet pressure of 80 PSIG (5.5 BAR), the calculation is as follows:

English Units:

$$SCFM_2 = 15 \times \frac{80 \text{ PSIG} + 14.7}{100 \text{ PSIG} + 14.7}$$

Metric Units:

$$SLPM_2 = 424.752 \times \frac{5.156 \text{ BAR} + 1.014}{6.895 \text{ BAR} + 1.014}$$

Method 2

Multiply the known flow by the ratio of the input pressures converted to absolute

Step 1: Calculate the ratio of absolute inlet pressures.

English Units:

$$\frac{80 \text{ PSIG} + 14.7}{100 \text{ PSIG} + 14.7} = 0.8256$$

Metric Units:

$$\frac{5.516 \text{ BAR} + 1.014}{6.895 \text{ BAR} + 1.014} = 0.8256$$

Step 2: Multiply known flow by the above ratio you just calculated.

English Units:

$$15 \text{ SCFM} \times 0.8256 = 12.384 \text{ SCFM}$$

Metric Units:

$$424.752 \text{ SLPM} \times 0.8256 = 350.693 \text{ SLPM}$$

Therefore

Model 3215 consumes 15 SCFM @ 100 PSIG (425 SLPM @ 6.9 BAR) and will consume 12.4 SCFM @ 80 PSIG (351 SLPM @ 5.5 BAR).

Note: To convert SCFM to SLPM, multiply by the factor 28.3168

To convert PSIG to BAR multiply by the factor 0.0689

For more information on pipe sizing, pipe selection, conversion, and consumption, please visit our website at https://exair.co/04-airdata
or scan this qr code provided.