Putise

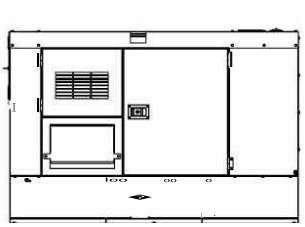

Generator set

Sound-proof type

DT315P5S-AU

SPECIFICATIONS

DTP-AU series
DT315P5S-AU

50 Hz @ 1500rpm,3-phase/4-wiring

1 Standards & Conditions

Design Standards

The designs and the productions are in conformity with:

- Conformite Europeenne (CE)
- ISO8528-5:2005
- AS 3000-2018
- AS 3010-2017

Environmental Operating Conditions

- Installation place: Outdoors or indoors (well ventilated).
- Ambient temperature: -25℃ to 50℃.The coolant heater is needed when the temperature is below 5℃
- Humidity: Less than 90%.
- Altitude: Below one thousand (1000) meters above sea level.

Factory Inspection

- Inspection items.
- Protection devices working test.
- Starting ability in normal temperature.
- 50% rated power load moment capability.
- Voltage deviation and speed variation: 0%, 25%, 50%, 75%, 100%, 110% Load.

Painting Process

- Painting process specifications and colors are based on the manufacturer's standard.
- The customer could also choose the color which the manufacturer offers.

2 General Features

- PowerLink engine 6D10TAG2
- Close coupled to PowerLink alternator PL4MP
- Microprocessor control module PLC-920
- Main circuit breaker: 500A
- Rotate speed governor: Electric fuel control
- Excitation system: Self excited,SHUNT
- A.V.R model: SX440
- Key switch
- Emergency stop switch
- ATS(automatic transfer switch)receptacle
- Remote run connector
- 2x12V/120AH sealed for life maintenance free battery
- Lockable battery isolator switch
- Powder coated canopy
- 45℃ radiator
- Steel base frame
- Vibration isolators between the engine/alternator and base frame
- Dry type air filter
- Base fuel tank for 12 hours running
- Drain points for fuel tank
- Operation Manual / Specifications

3 Equipment

General technical data

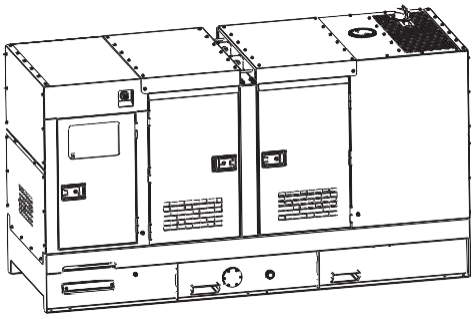

Model. DT315P5S-AU

Tank capacity. 950L

Dry weight..... 4000kg

Sound pressure level @ 7m..... 73.0dBA

Dimensions L×W×H. 3850x1420x2294mm

Standby Power..... 346kVA/275kW

Prime Power..... 315kVA/250kW

Voltage	380V	400V	415V
Ampere	493.8A	469.1A	452.2A

Genset Fuel Consumption					
Frequency/Load	25%	50%	75%	100%	110%
50Hz (L/h)	20	38	56	75	83

3RZHU 6\VWHP

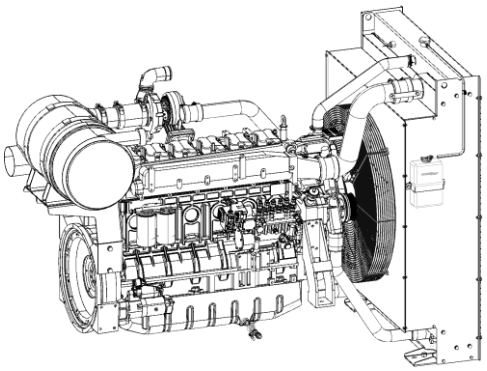

Engine Manufacturer/Brand	Powerlink
Engine Model.	6D10TAG2
Dimensions L×W×H.	1775×860×1428mm
Dry Weigh (approx.)	1100kg
Number of Cylinders.	6
Bore	126mm
Stroke	155mm
Displacement.	10.0L
Compression Ratio	17.0
Type of injection	Direct injection
Intake System.	Turbocharged and charge air cooled
Intake Resistance	≦5kPa
Cooling System	Water cooled
Fan	Pusher
Battery Voltage	V
Type of Fuel	No.2 or ASTM D975
Type of Oil	API CF/SE or CCMCF4
Oil Capacity	24.0L
Type of Coolant	Glycol mixture
Coolant Capacity	51.0L
Back Pressure	≦10.1kPa
Standby Power	314kW
Prime Power	285kW

Alternator

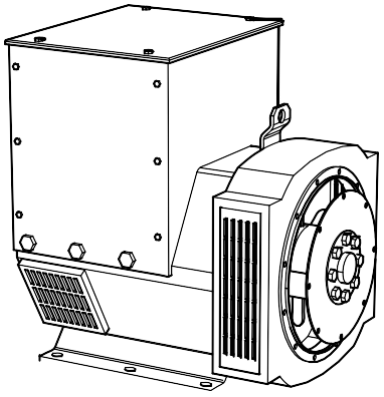

Alternator Manufacturer/Brand	PowerLink
Alternator Model	PL3H
Exciter	Brushless
Cooling Fan	Cast alloy aluminum
Windings	100% copper
Insulation Class	H
Winding Pitch	2/3
Terminals	12
Drip Proof	P23
Altitude	≤1000m
Overspeed	2250rpm
Air Flow	N/A
Voltage Regulation	±1.0%
Total Harmonic TGH / THCat no load < 1.5 % - on load < 5%	
Telephone Interference	THF<2%;TIF<50

PLC-920 Control System

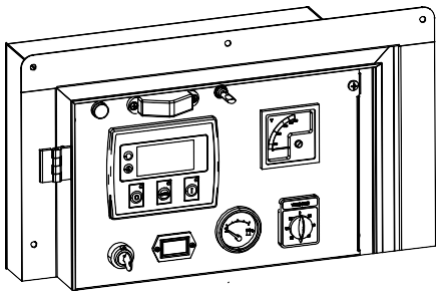

PLC-920 is an advanced control module based on microprocessor designed to control the engine via push buttons on the front panel. The module is used to start and stop the engine and indicate fault conditions, automatically shutting down the engine and giving a true first up fault condition of an engine failure.

Standard Control Function

- Manual Engine Control Module
- Low Oil Pressure
- High Engine Temperature
- Auxiliary Shutdown
- Overspeed Protection
- Protection hold-off timer
- Charge Failure warning

4 Overall Dimensions

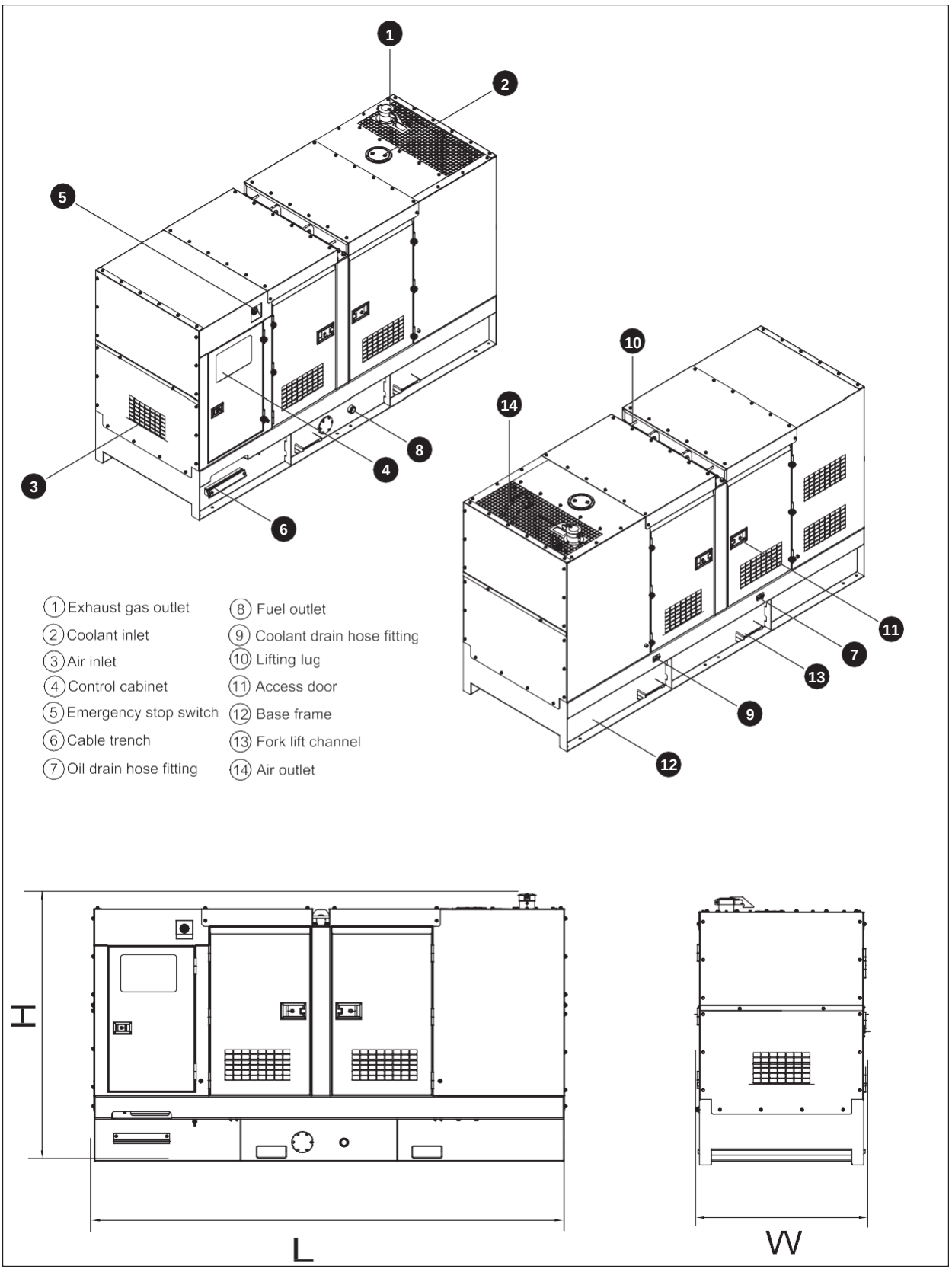

5 Control System

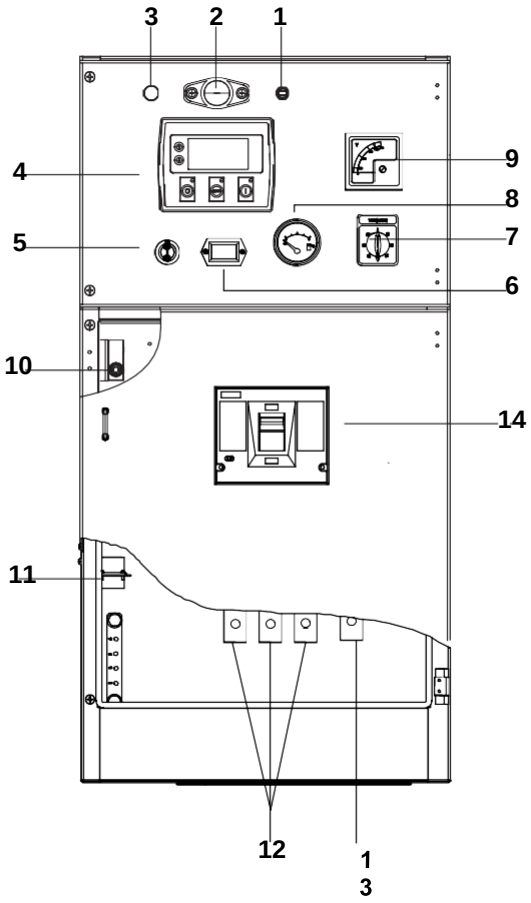

Control & field wiring cabinet

1	Control cabinet lamp switch
2	Control cabinet lamp
3	Charge indicator
4	Control module
5	Key switch
6	Time counter
7	Voltage changer-over switch
8	Fuel level meter
9	Voltage meter
10	Limit switch
11	Mains input/Remote control/ATS connector
12	Live wire terminal
13	Neutral wire terminal
14	Main circuit breaker

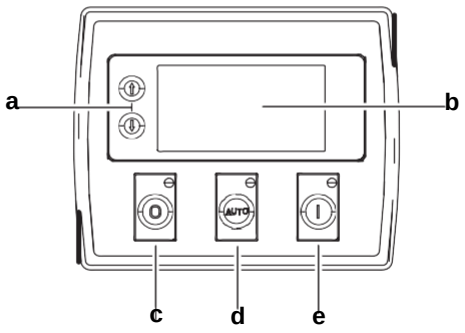

Control module

Ref.	Description
a	Navigation button£» Accept (Configuration mode only)
b	Main status display
c	Stop/reset button£» Next page (Configuration mode only)
d	Auto start button£» Decrease value/next item (Configuration mode only)
e	Start button£» Increase value/next item (Configuration mode only)

1000033908-A2-E
10.2020