RR-108 RACK CONVEYOR WASHER

The RR-108 can meet all requirements when it comes to washing dishes, crockery, buckets, containers, pots, pans, utensils and all types of items used for food processing. They represent the ideal solution for small to medium sized kitchens and food outlets, that require a seamless flow of clean items.

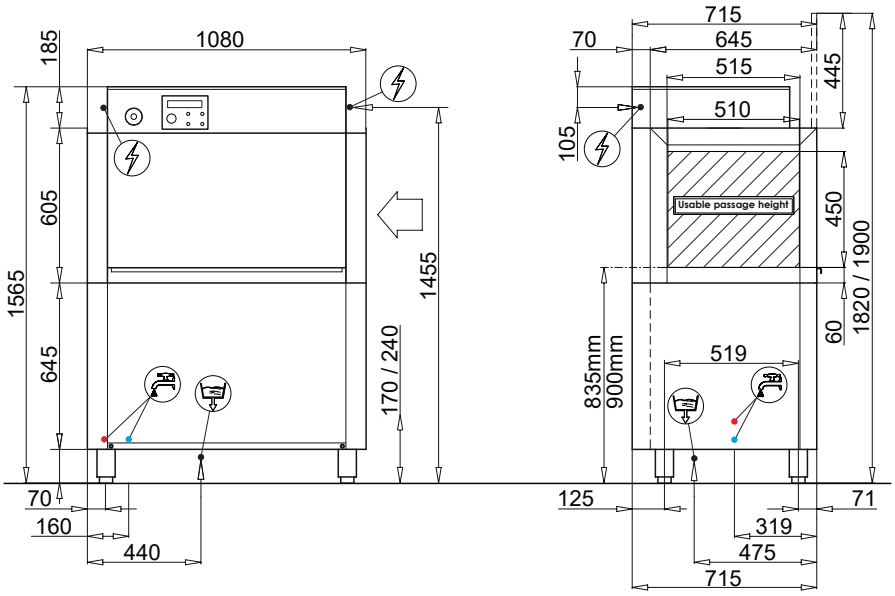

Standard Features

- 500 x 500 Racks
- Electrically Heated
- Direction can be customised
  (left>right or right>left)
- Insulated doors
- Optional: Heat Recovery, Detergent Dispenser, HACCP, Self Cleaning, Blowers, entry & exit tables

WATER SAVING

ECO FRIENDLY

Power supply	415V, 3Ø+N 50 Hz
Total power	25KW
Total current	35 Amp
Wash tank capacity	80 ltrs
Water consumption (per cycle)	200 ltrs
Rinsing temp (approx)	85°C
Rack size	500mm x 500mm
Tallest washable item	450mm
Weight (empty)	210 kg
Drain hose diameter	Ø 50mm
Water connection (Hot*)	3/4" hose

*Connect to hot water for optimum performance

Rhima Australia Pty Ltd
www.rhima.com.au
Tel: 1300 347 944

Rhima New Zealand
www.rhima.co.nz
Tel: +64 9414 5575

Rhima Singapore
www.rhima.sg
Tel: +65 9107 8943