autochair
Innovating Vehicle Adaptations since 1983

MOBILITYCARE
Since 1992

Phone: (03) 9568 8383
39 Cambro Road, Clayton VIC 3168
info@mobilitycare.net.au
www.mobilitycare.net.au

SmartLifter Hoists

LC Range

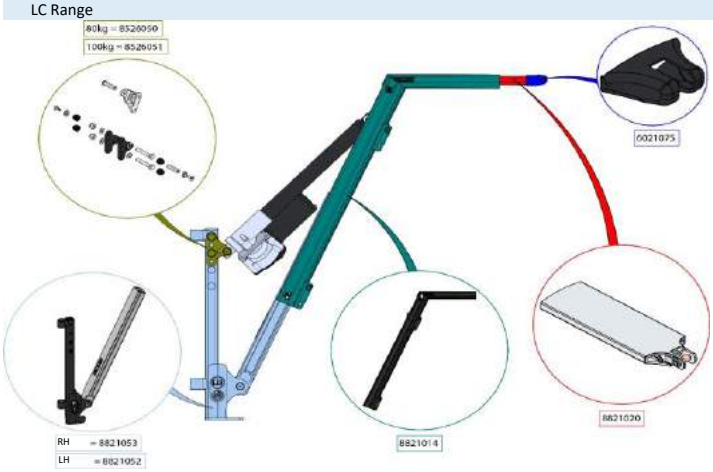

Item	Code LH	Code RH
Horizontal	8821020	
Boom only	8821014	
Pivot post and vertical extension inner	8821052	8821053
Fixing Kit 80kg	8526050	
Fixing Kit 100kg	8526051	
L-C End Cover	6021075	
Complete as pictured		
80kg	C9021080	C9021081
100kg	C9021100	C9021101

LP Range

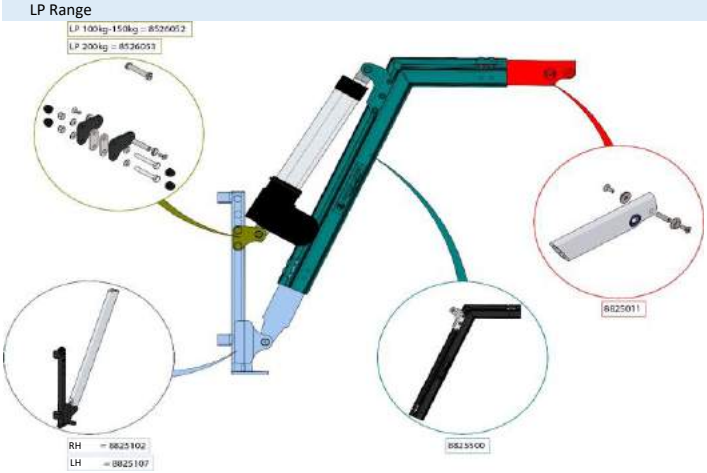

Item	Code LH	Code RH
Horizontal	8825011	
Boom only	8825500	
Pivot post and vertical extension inner	8825107	8825102
Fixing Kit 100-150kg	8526052	
Fixing Kit 200kg	8526053	
Complete as pictured		
100kg - 200 stroke	C9025112	C9025102
100kg - 250 stroke	C9025113	C9025103
100kg - 300 stroke	C9025115	C9025105
125kg - 250 stroke	C9025126	C9025125
125kg - 300 stroke	C9025131	C9025130
150kg - 250 stroke	C9025114	C9025104
150kg - 300 stroke	C9025116	C9025106
200kg - 250 stroke	9025110	9025100

LM Range

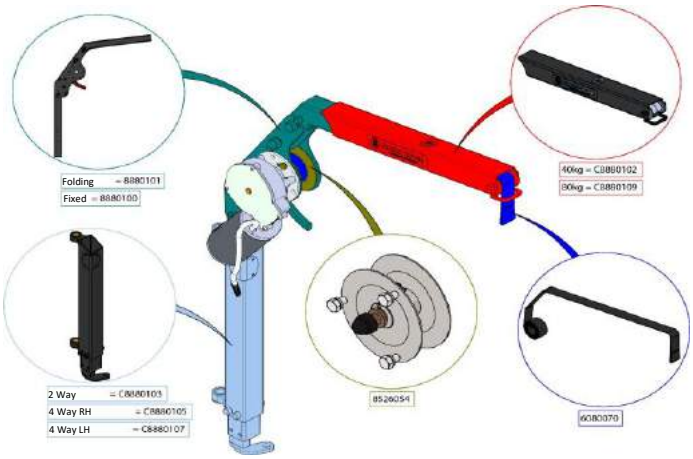

Item	Code LH	Code RH
Horizontal 40kg	C8880102	
Horizontal 80kg	C8880109	
Boom only fixed	8880100	
Boom only folding	8880101	
Pivot post 2 way	C8880103	
Pivot post 4 way	C8880107	C8880105
Spool and fixings	8526054	
Webbing strap	6080070	
Complete as pictured		
40kg 2 way folding	C9080005	C9080004
40kg 4 way folding	C9080023	C9080022
80kg 2 way folding	C9080011	C9080010
80kg 4 way folding	C9080017	C9080016
80kg 2 way fixed	C9080008	C9080007
80kg 4 way fixed	C9080014	C9080013