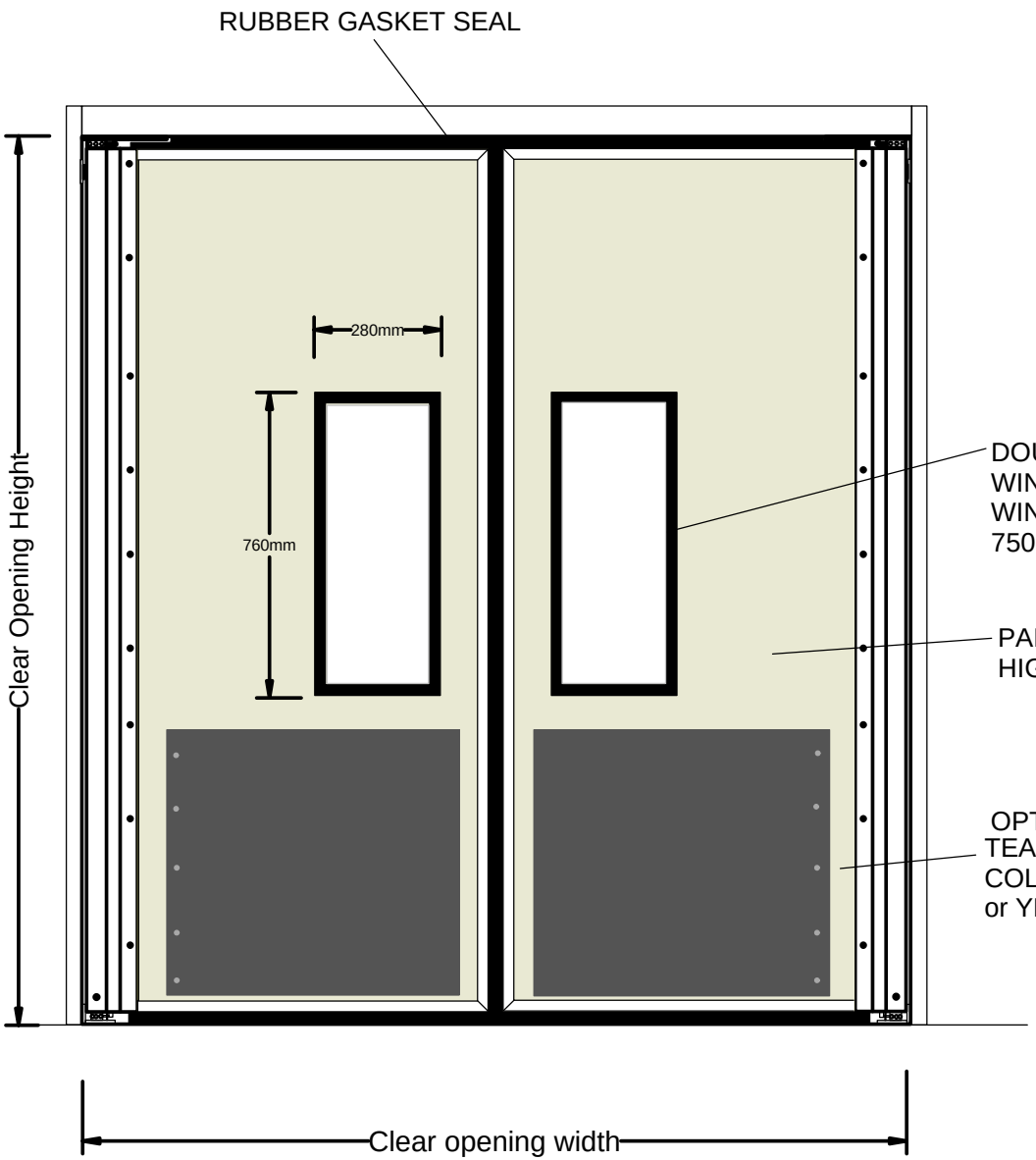

DOUBLE GLAZED PC
WINDOW WITH REPLACEABLE
WINDOW FRAME
750 x 260mm

PANEL SURFACE
HIGH IMPACT ABS

OPTIONAL
TEARDROP BUMPERS 600MM
COLOUR BLACK, GREY HEARTH
or YELLOW

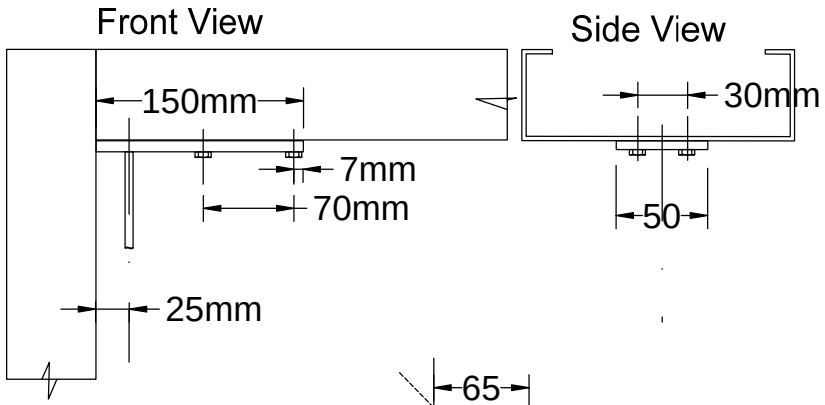

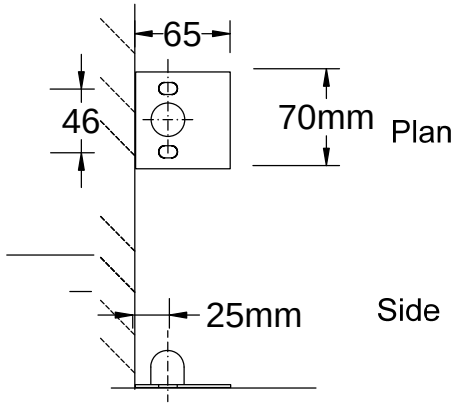

Jackplate Floor mount

SIGNATURE OF APPROVAL TO
PROCEED TO MANUFACTURE

SIGN DATE

REV.No.	Revision Note.	Date.	Signature	Checked
D				
C				
B				
A				
O	Original Issue.			

Item ref. | Quantity | Material

Article No./Reference

Designed or Drawn by: S Fell | Checked by. | Approved by--Date. | Filename | Date. 16th June 2014 | Scale. N/A

Owner: dhf INTERNATIONAL

Title/Name. TRAFFIC DOOR PR

Drawing number | Edition O | Sheet 1of1