BROBO GROUP©

A.C.N. 098 264 316
A.B.N. 42 098 264 316

BROBO GROUP (AUST) PTY. LTD.
8 Fowler Rd, Dandenong South
Victoria 3175, AUSTRALIA.
+ 61 3 9794 8751
+ 61 3 9794 8792
info@brobo.com.au
www.brobo.com.au

AUSTRALIAN MADE AND OWNED

Certified System Quality ISO 9001

PRODUCT AND MAINTENANCE MANUAL
BENCH/BUFF GRINDERS
200HD & 250HD

OPERATING MANUAL FOR BROBO GROUP BENCH/BUFF GRINDERS 200HD & 250HD

TECHNICAL SPECIFICATION

CHAPTER 1: Installation of the Machine

1.1 Unpacking & Handling the Machine
1.2 Minimum Requirements
1.3 Anchoring the Grinder Unit
1.4 Connection to Power Source

CHAPTER 2: Safety & Accident Prevention
2.1 Operation of the Machine
2.1.1. Noise Level
2.1.2. Power Supply
2.2 General Requirements
2.3 Advice for the Operator
2.4 Machine Safety Devices
2.4.1. Reference Standards

CHAPTER 3: Main Functions & Operation of the Machine
3.1 Main Features
3.2 Preparation for Operation
3.3 Operation Recommendations

CHAPTER 4: Drawings, Layouts, Assembly & Spare Parts
4.1 Spare Parts
4.2 200 HD Grinder Assembly (Stand – Optional)
4.3 250 HD Grinder Assembly

CHAPTER 5: Maintenance & Selection of Consumables
5.1 Role of the Operator
5.2 Maintenance Requirements
5.3 General Maintenance of Functioning Components
5.4 Replacing grinding wheels.

CHAPTER 6: Troubleshoot

APPENDIX

TECHNICAL SPECIFICATION

MACHINE SPECIFICATION	MOTOR RATING (kW / HP / V / PH)	DESCRIPTION	WHEEL SIZE & TAPED BUFF ADAPTERS
200HD, 1 PH (3850260)	1.1 / 1.4 / 240 / 1	Bench Grinder	∅200mm x 25mm wide x 19.05mm bore
200HD, 3 PH (3850210)	1.1 / 1.4 / 415 / 3	Bench Grinder	∅200mm x 25mm wide x 19.05mm bore
200HD, 1PH (3850280)	1.1 / 1.4 / 240 / 1	Buff Grinder	3/4” x 20 TPI
200HD, 3 PH (3850230)	1.1 / 1.4 / 415 / 3	Buff Grinder	3/4” x 20 TPI
200HD, 1PH (3850270)	1.1 / 1.4 / 240 / 1	Bench/Buff Grinder	∅200mm x 25mm wide x 19.05mm bore, 3/4” x 20 TPI
200HD, 3 PH (3850220)	1.1 / 1.4 / 415 / 3	Bench/Buff Grinder	∅200mm x 25mm wide x 19.05mm bore, 3/4” x 20 TPI
250HD, 1 PH (3500060)	1.1 / 1.4 / 240 / 1	Bench Grinder	∅250mm x 25mm wide x 19.05mm bore
250HD, 3 PH (3500010)	1.1 / 1.4 / 415 / 3	Bench Grinder	∅250mm x 25mm wide x 19.05mm bore

Packaged Dimensions

57cm x 30cm x 41cm

Weight

HD200 34 kg
HD250 40 kg

CHAPTER 1 - Installation of the Machine

1.1. Unpacking & Handling the Machine

Upon receiving the ***Brobo Group*** ***BENCH/BUFF GRINDERS 200HD & 250HD***, the machine should be standing upright & positioned centrally on top of a wooden pallet.

Carefully remove the packaging surrounding the grinder unit & elevating the machine away from the box, mindful that the machine should be equally supported. Position the grinder to the desired location, ensuring that a power outlet is available & within reach of the grinder power cord.

Prior to powering up the grinder, place the desired wheel/buff mop onto the machine spindles. Note that if the bore sizes on the grinding wheels &/or buffering mops do not fit the spindle, taper adapters & buff adapters are readily available for purchase from most hardware & tool outlets.

Once the wheels/buffs are securely fastened to the machine, connect the grinder to the mains electrical supply & power up the machine.

FIGURE 1. *Shipping of grinder unit*

1.2. Minimum Requirements

For the machine to function correctly, the room in which the grinder unit is to be installed must be in the vicinity of, & satisfy the following conditions:

- *240/415V Power Supply*
- *Working Pressure - Not less than 600kPa (6 Bar) & no greater than 900kPa (9 Bar)*
- *Ambient Temperature - From -10℃ to +50℃.*
- *Relative Humidity: Not more than 90%.*
- *Lighting: More than 500 LUX.*

WARNING – OPERATING VOLTAGE VARIATION

Each grinder model has an inbuilt safety system to protect it against voltage variations. However, for the machine to perform efficiently, ensure that the grinder unit operates within ±10% limits of the recommended voltage of the motor.

1.3. Anchoring the grinder unit

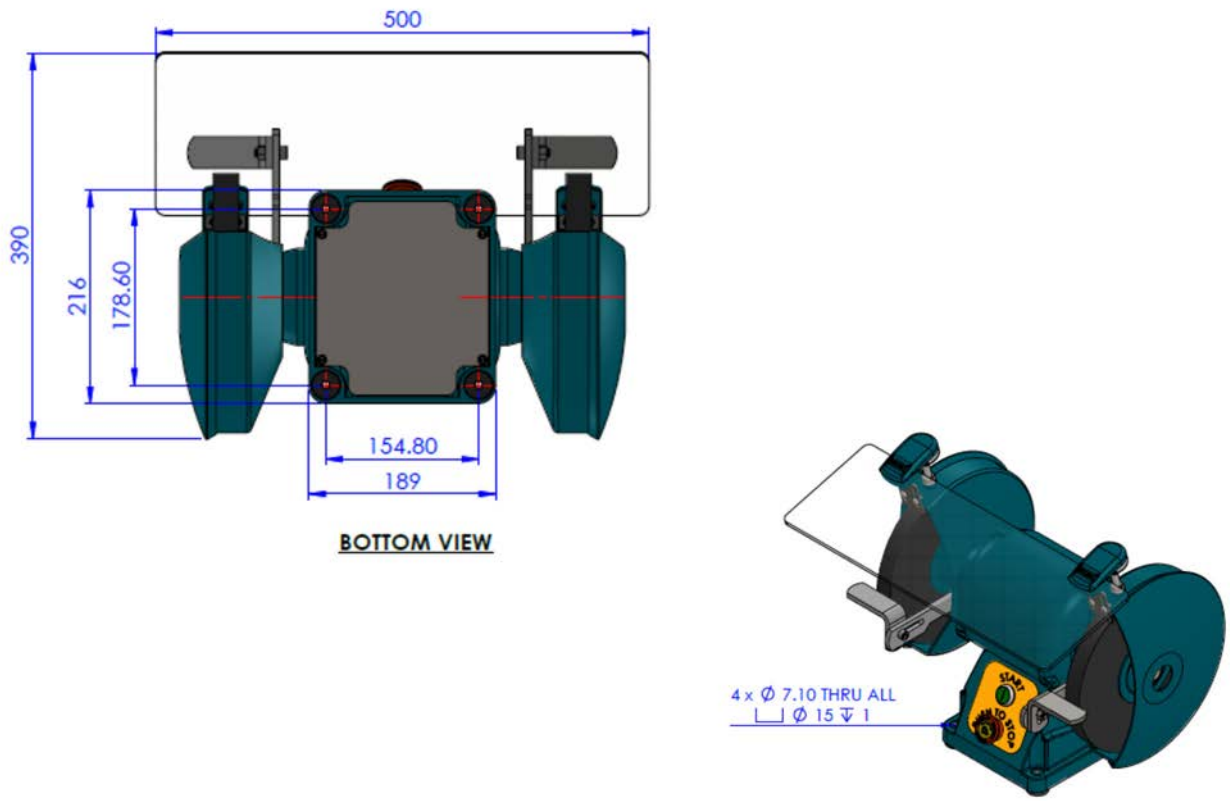

Figure 2. *Anchoring the grinder unit*

1.4. Connection to Power Source

Before connecting the machine to the power supply, check that the socket is not connected in series with other machines. This condition is critical for the ideal operation of the grinder unit.

Single & Three Phase

a) **Single phase machines** are provided with three pins, **15 amps** rated plugs & leads for connection to **240V**, **50Hz** power supply in **Australia**.

Active = Brown
Neutral = Light Blue
Earth = Green/Yellow

VOLTAGE
240V/1 PH

MAIN VOLTAGE
240V

Figure 3.1 *Connection 3 pins – 1 Phase*

b) **Three phase machines** should be fitted with a suitable, approved **four pin plugs** (i.e. three phase & earthing - **not provided**)

Active = Brown, White. Dark Blue
Earth = Green/Yellow

VOLTAGE
415V/3PH

MAIN VOLTAGE
415V/3PH

Figure 3.2 *Connection for "4-CORE" Wire System with Neutral – 3 Phase*

c) Check the power supplied & motor specifications before plugging in the machine. Check the terminal connection on dual voltage motor terminal box & connect it accordingly to the corresponding voltage supply.

d) If the dual motor is requested, the motor is **always** connected to the higher voltage, unless otherwise specified prior to the order being placed.

CHAPTER 2 - Safety & Accident Prevention

The ***Brobo Group*** ***BENCH/BUFF GRINDERS 200HD & 250HD*** has been designed & manufactured in accordance with **Australian Standards**. It is ***HIGHLY RECOMMENDED*** that the instructions & warnings contained in this chapter be carefully followed for correct usage of the machine.

2.1. Operation of the Machine

This machine is specifically designed for grinding of various ferrous metal sections. Our company has no responsibility for any damages & risks caused as the result of changing & addition on the machine or removing any part of the machine.

This machine involves a high-speed revolution; therefore extreme caution is required when operating the device.

The employer is responsible for instructing the personnel who, in turn, are obliged to inform the operator of any accident risks, safety devices, noise emission & accident prevention regulations provided for by national & international laws governing the use of the machine. ***The operator must be fully aware of the position & functions of all the machine's controls.***

All those concerned must strictly adhere to ALL instructions, warnings, & accident prevention standards in this manual.

The following definitions are those provided for by the ***EEC DIRECTIVE ON MACHINERY No. 98/37/CE***:

- **Danger Zone -** any zone in and/or around a machine in which the presence of a person constitutes a risk to the safety & health of that person.
- **Person Exposed** - any person finding him or herself, either completely or partly in a danger zone.
- **Operator** - the person or persons are given the responsibility of installing, operating, adjusting, maintaining, cleaning, repairing, & transporting the machine.

WARNING – UNAUTHORISED MODIFICATIONS/REPLACEMENTS/USE

The manufacturer declines any responsibility whatsoever, either civil of criminal, in the case of unauthorised interference or replacement of one or more parts or assemblies on the machine, or if accessories, tools & consumable materials used are different from those recommended by the manufacturer, or if the machine is inserted in a plant system & its proper function is altered.

2.1.1. Noise Level

The noise level of an idling grinder has been measured to be ***below 85 dBA***. This complies with the ***Australian Occupational Health & Safety (Noise) Regulations 1992.***

Please note that peak impulse noise levels will be experienced due to variables including blade characteristics, type, & condition. This will also vary accordingly depending on the size & type of sample being ground. Under these circumstances, management should make available to the operator(s) the appropriate hearing protection equipment as prescribed under the above-stated act.

2.1.2. Power Supply

The 240/415V power supply requirements for this machine are of a high level & unauthorized interference & or inadequate maintenance could result in a situation that could put the operator at risk. A ***qualified*** electrical engineer should always be assigned to maintain & repair the system.

2.2. General Requirements

2.2.1. Lighting

Insufficient lighting during the operation of the unit would constitute a safety hazard for the people concerned. For this reason, the user of the machine must provide adequate lighting in the working area to eliminate areas of shadow, whilst also prevent dazzling illumination sources
(Reference standard ***ISO 8995 - 2002 'Lighting of Indoor Workplaces'***).

2.2.2. Connection

Check that the power supply cables, compressed air supply (if applicable) & coolant system complies with, & are operating within the acceptable range of the grinder capabilities.
Faulty, damaged or worn components must be replaced immediately.

2.2.3. Earthing Systems

The installation of the earthing system must comply with the requirements stated in the:
IEC Standards Part 195: Earthing & Protection Against Electric Shocks 1998.

2.3. Advice for the Operator

MANUALS

The operation & maintenance manuals should be delivered to the responsible & in charge persons.

DELIVERY

Check the machines when they arrive at your premises. If you determine any damage occurred during the transportation, apply & fulfill the related agreement conditions. Please contact ***Brobo Group*** for changing the damaged parts & for ordering the new parts. Only use original spare parts for maintenance & repairing.

STORING

The machine should be used in a closed area & in a dry environment. It must not be used in the environments have the risks of explosion.

INSTALLATION & STARTING

The installation & starting of the machine must be done by the experienced staff. The instructions must be observed during all procedures.

PRECAUTIONS AGAINST ACCIDENTS

Comply with all instructions on the manuals for preventing accidents. The machines comply with international standards ISO 9001

MAINTENANCE & CLEANING

The maintenance & cleaning should be done by the qualified person.

COPYRIGHT

The copy or simulation of our machines or some parts is not allowed without written permission from us.

WARRANTY

The warranty is applied according to the conditions of the agreement. The breakdowns caused using of foreign spare parts supplied out of our company will be out of our warranty terms. Our company will have no responsibility for the reason of the instructions do not comply or the wrong operation of non-capable staff.

Read the instruction manual before operating the Grinder
Keep the User Manual in a place just beside the machine where it is easily found.
Keep always the labels clean & in good condition

Protective eyewear or goggles must be worn at all times while attending & operating the grinder.

Do not attempt to operate the machine unless all safety guards are in operation.

Ensure that ***hands & arms are kept clear of the grinding zone*** when the machine is operating.

Do not wear loose clothing with long sleeves & oversized gloves, bracelets, necklaces or any other loose object that may become entangled in the machine's wheel during grinding. Long hair must be tied back or placed in a hair net.

Always disconnect the power supply to the machine before carrying out any maintenance work or adjustments. This includes cases of abnormal operations of the machine.

The operator ***MUST NOT*** conduct any risky operations or those not required for the grinding in course.
Never move the grinder while the machine is operating.

Always keep the workplace are as clean as possible.
Remove equipment, tools or any other objects from the grinding zone.

Support the workpiece to prevent it falling or jamming during the grinding cycle.

If the wheel jams during a grinding, activate the emergency stop function immediately

Always turn off the machine before carrying out any repair work. Consult the Brobo Group Engineering Department in the country in which the machine was initially purchased.

2.4. Machine Safety Devices

This product & maintenance manual is not purely intended as a guide for the usage, operation, & maintenance of the grinder unit in a strict production environment; it is instead an instrument to providing information on how to use the machine correctly & safely. The following standards listed in section *2.4.1*, which are applicable to the ***Brobo Group*** ***BENCH/BUFF GRINDERS 200HD & 250HD***, are those specified by the EEC Committee that governs the safety of machinery, health & safety at work, personal protection & safeguarding of the work environment. In addition, the grinder also complies with the Australian Standards regarding the safeguarding & general requirements for electrical equipment.

2.4.1. Reference Standards

MACHINE SAFETY

- *EEC Directive No. 98/37/CE - Machines Directive*
- *EEC Directive No. 91/368 - 94/68 - Amends sections of EEC Directive No. 98/37/CE relating to machine safety*
- *EEC Directive No. 73/23 - Low Voltage Directive*
- *AS4024.1 - 1996 - Safeguarding of Machinery*

HEALTH & SAFETY AT WORK

- *AS3100 - 2002 - General Requirements for Electrical Equipment*
- *OH. & S. 1995.81/1995 - Compliance References*
- *EEC Directive No. 80/1107; 83/477; 86/188; 88/188; 88/642 - Protection of workers against risks caused by exposure to physical, chemical & biological agents in the workplace*
- *EEC Directive No. 73/23 & Special EEC Directives No. 89/654; 89/655 - Improvements in health & safety at work*

CHAPTER 3 - Main Functions & Operation of the Machine

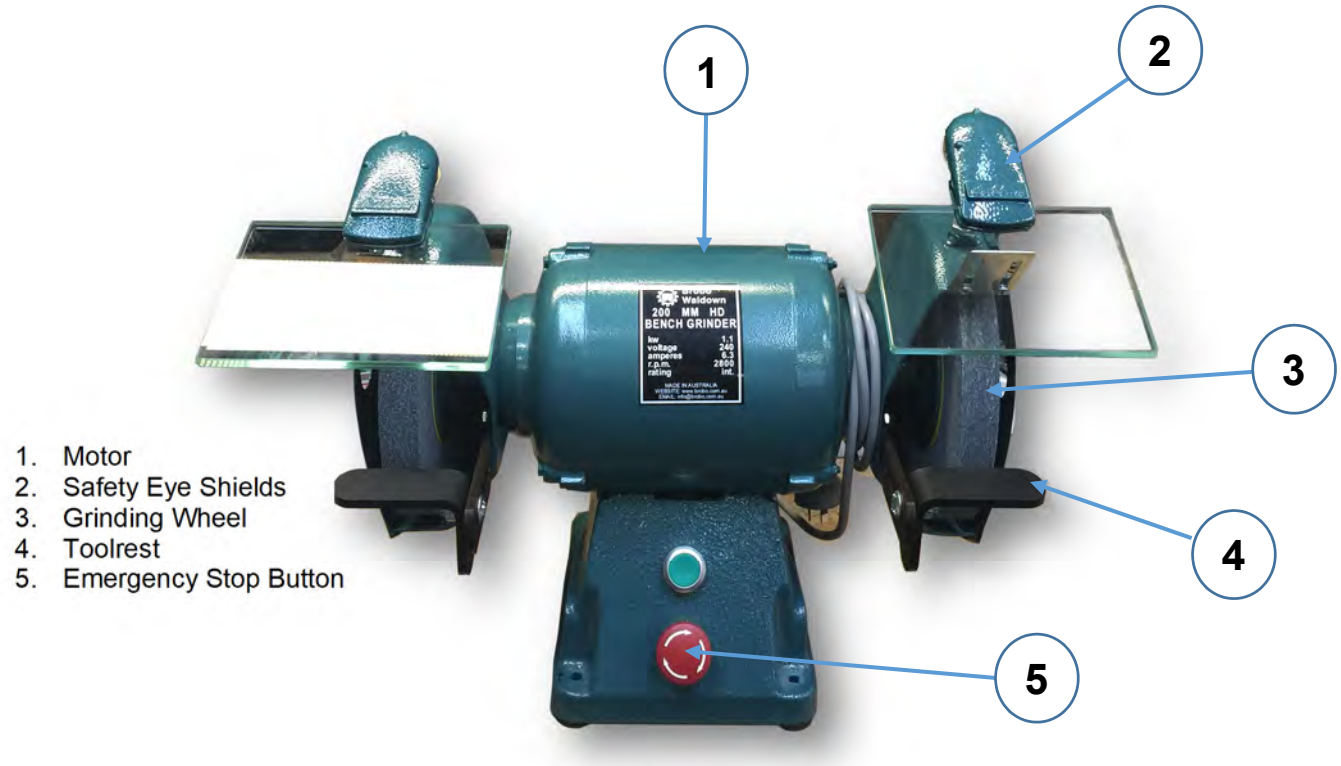

Figure 4. *Grinder Main Components*

3.1.1. Motor

Available in single phase 240 volts or 3 phases 415 volts, the 1.1KW CMG motor is the heart of the grinder unit that produces 2800rpms toward the spindles & is operating at suitable speeds for grinding & buffing applications.

3.1.2. Safety Eye Shields

The reinforced glass safety eye shield serves to protect the user from any debris & particles that might be dislodged from the grinding/buffing process. The bracket mountings also allow the user to adjust the position of the eye shield to suit various workpiece.

3.1.3. Grinding Wheel

Rated at A24/46 Grit, the general purpose grinding wheels are provided on all Brobo bench grinding machines. It is advisable for all operators that grinding/buffing wheels are available for purchase for various applications from reputable hardware stores. Also note that tapered buff & wire adaptors are available for purchase from Brobo, sold separately.

3.1.4. Toolrest

As implied, the Toolrest provides a stable platform in which the user can rest any tool piece for resharpening. The height & position of the Toolrest can be moved accordingly via the adjustable bolts provided.

3.1.5. Emergency Stop Button

In compliance with Australian Standards & ISO 9001, all Brobo grinding/buffing machines are now provided with emergency STOP button for ease of access during an emergency.

3.2. Preparation for Operation

The following procedure is recommended for the correct grinding using ***Brobo Group*** ***BENCH/BUFF GRINDERS 200HD & 250HD***

PROCEDURE

1) Clean the workpiece to ensure it is free of any grit, swarf or flammable substances. It is highly recommended that a solvent is used to remove any residue while ensuring the solvent is inflammable & non-toxic.

2) Prior to grinding/buffing, clear the work area around the workpiece of any sizeable items & tools to minimize the likelihood of the user getting injured during the grinding operation.

3) Using the Toolrest as a guide, rest the workpiece on the Toolrest & maneuver it to the desired grinding position.

4) Check that the safety eye shield is directly positioned to deflect swarf & any dislodged particles.

5) Turn the machine on. Proceed by slowly easing the workpiece into the grinding wheel. Apply a steady, even pressure & feed downward towards the wheel. During grinding, use a traversing motion across the face of the grinding wheel up to within the edge of the wheel. Take care not to round off the grinding wheel edges. Do not grind in the one spot on the wheel as this will damage the wheel. Good grinding practice preserves the shape of the grinding wheel face & reduces the inconvenience & frequency of dressing the grinding wheel.

6) Once completed, turn the machine off by depressing the stop button.

3.3. Operation Recommendations

- To reduce the amount of frictional heat generated between the grinding wheel & workpiece, a light coating of oil or lubricant can be applied to the workpiece periodically.
- Do not force the workpiece to the grinding/buffing as this not only significantly reduces the lifespan of the wheel, the workpiece could recoil sharply backward & injure the operator.
- Adjusting Toolrest: 3mm clearance between Toolrest & wheel face, Align Toolrest above the spindle Centreline

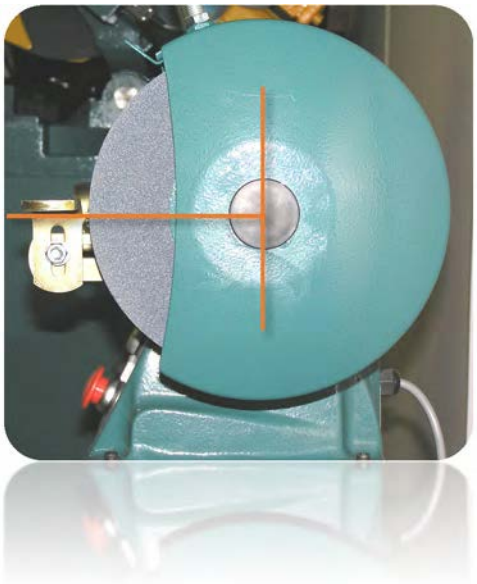

CHAPTER 4 - Drawings, Layouts, Assembly & Spare Parts

4.1. Spare Parts

Most common replace spare parts:

ITEM	PART NUMBER	DESCRIPTION
Eye Shields	3721070	Eye Shield Mouting Bracket & Glass
	3635140	Replacement Eye Shield Glass (150x100 mm)
	3721060	Eye Shield Mouting Bracket Only
Tapered Buff Adapto	3634070	L.H Tapered Buff Adaptor (3/4" x 20 TPI)
	3634080	R.H Tapered Buff Adaptor (3/4" x 20 TPI)
Wire Brush Adaptor	3801230	L.H Wire Bush Adaptor & Flanges (3/4" x 20 TPI)
	3801240	R.H Wire Bush Adaptor & Flanges (3/4" x 20 TPI)
Buff Mops	3805550	200 mm Calico Mops
Wire Wheels	3805630	Carbon Steel ⌀200x20x19.05 mm
Stands	3643100	Sheet Metal
	3801430	Column
Switch Gear		*Zero Voltage Release & Overload Protection Kit*
	3501110	Single Phase
	3501090	Three Phase
		Zero Voltage Release & Overload Protection Kit
		C/W Lockable Isolation Switch Kit
	3501120	Single Phase
	3501100	Three Phase
	3211140	Isolation Switch (1 Ph & 3 Ph)
Emergency Button	M22-DRP-R	Emergency Button (Mushroom Actuator)

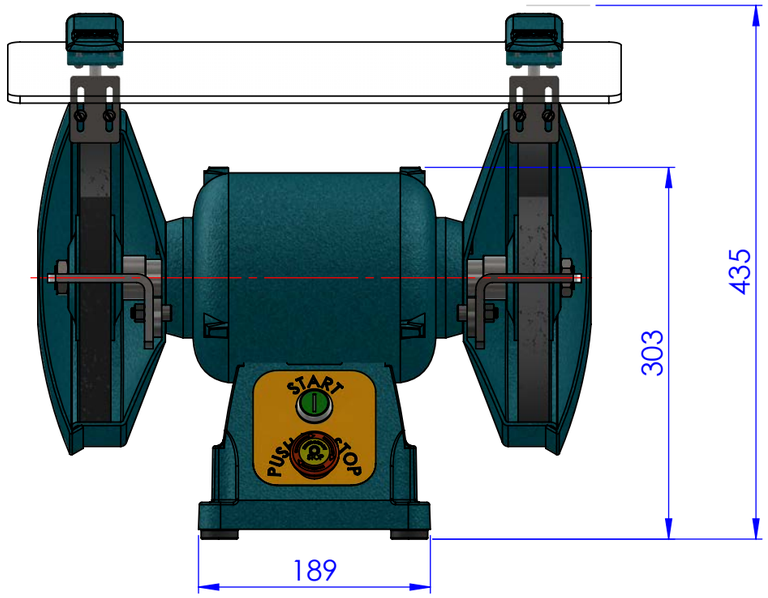

FRONT VIEW

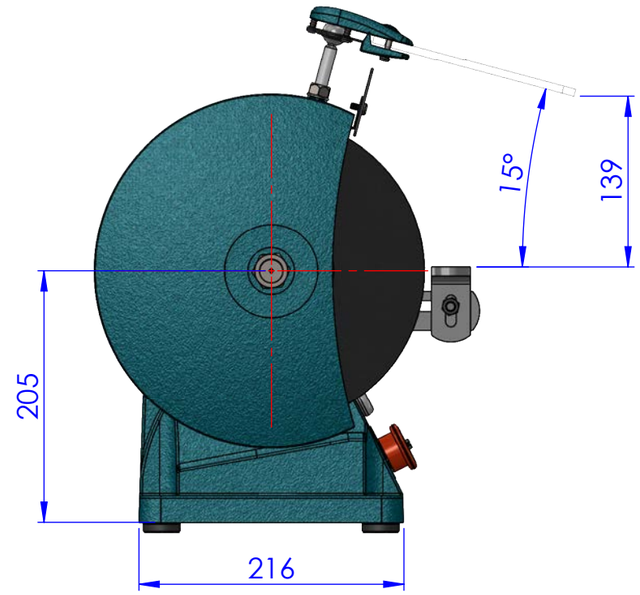

SIDE VIEW

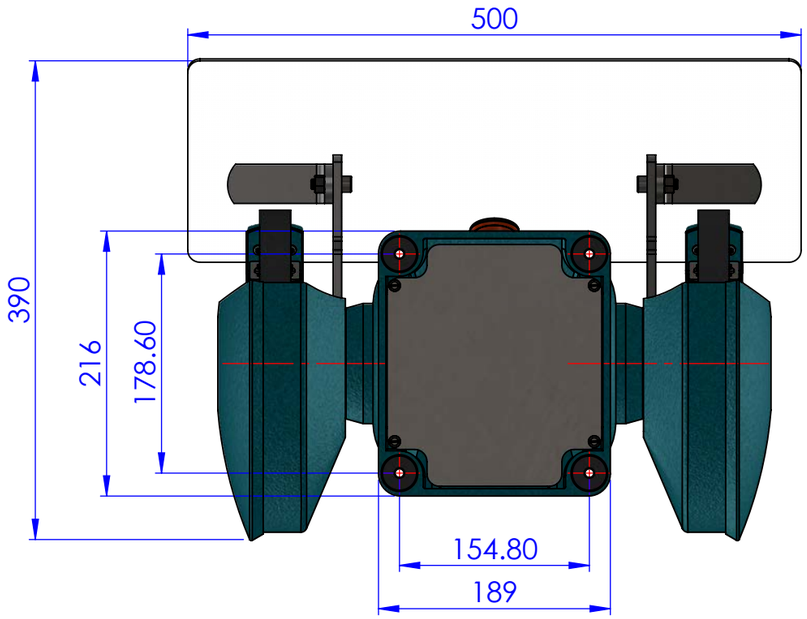

BOTTOM VIEW

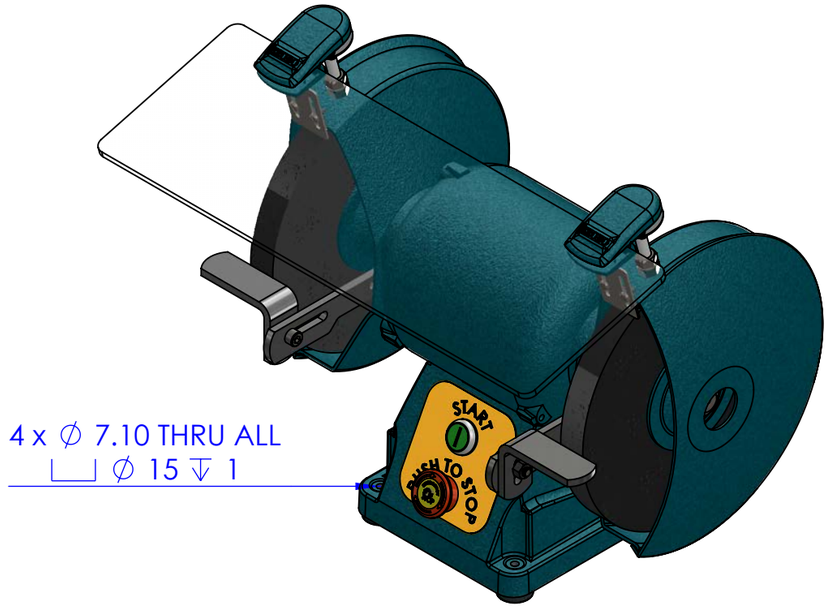

ISO VIEW

DRAWN ANH
DATE 26.06.2020
MATERIAL:
WEIGHT:

UNLESS OTHERWISE SPECIFIED:
DIMENSIONS ARE IN MILLIMETERS
SURFACE FINISH:
TOLERANCES:
LINEAR:
ANGULAR:

BROBO GROUP
Address : 8 Fowler Rd, Dandenong VIC 3175
https://brobo.com.au/

TITLE:

BENCH GRINDER MAIN DIMENSIONS

DO NOT SCALE DRAWING SCALE:1:5
DWG NO. BG01
REVISION 0
SHEET 1 OF 1 A3

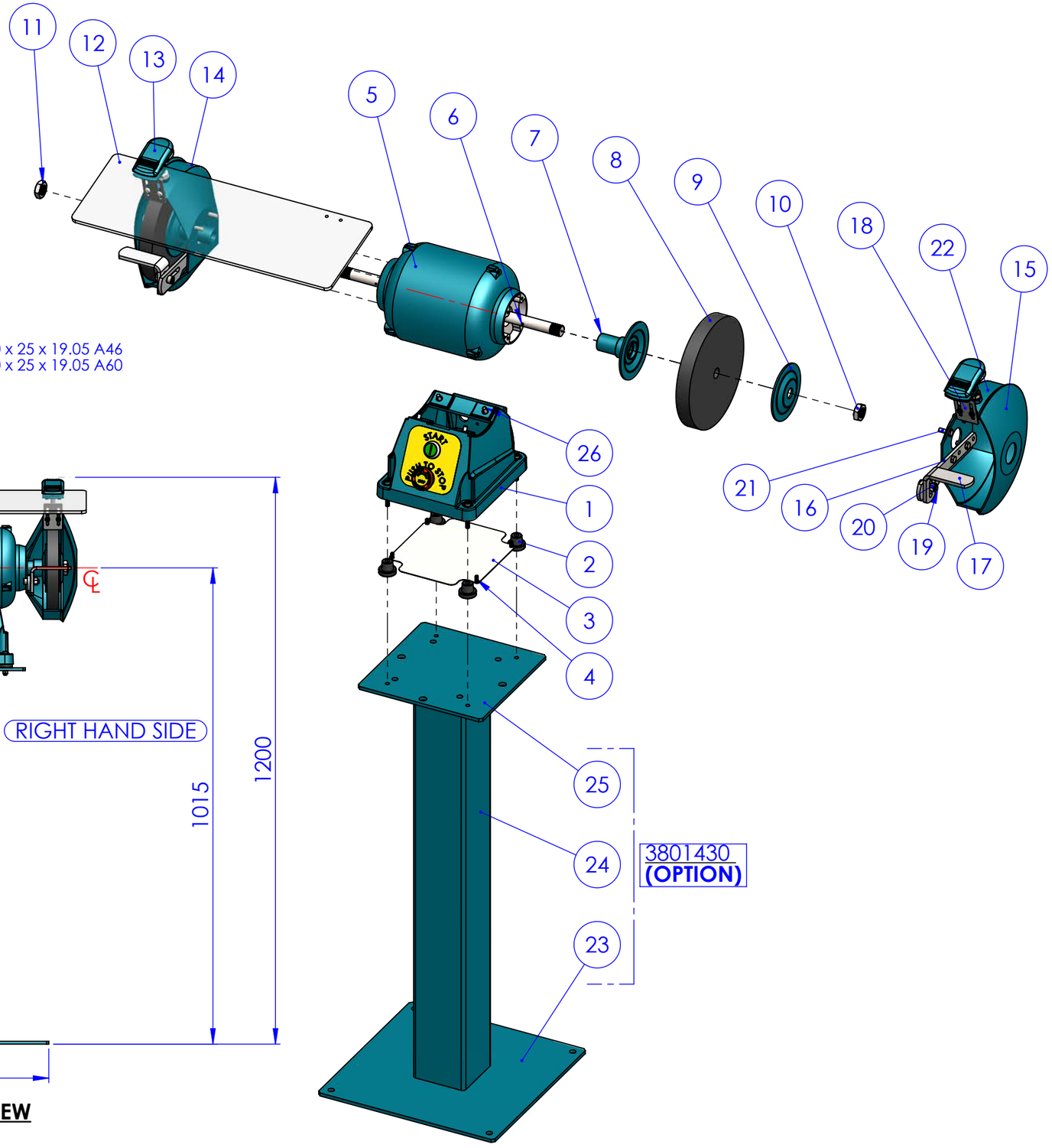

OPTION
3845300 : GRINDING WHEEL 200 x 25 x 19.05 A46
3845310 : GRINDING WHEEL 200 x 25 x 19.05 A60

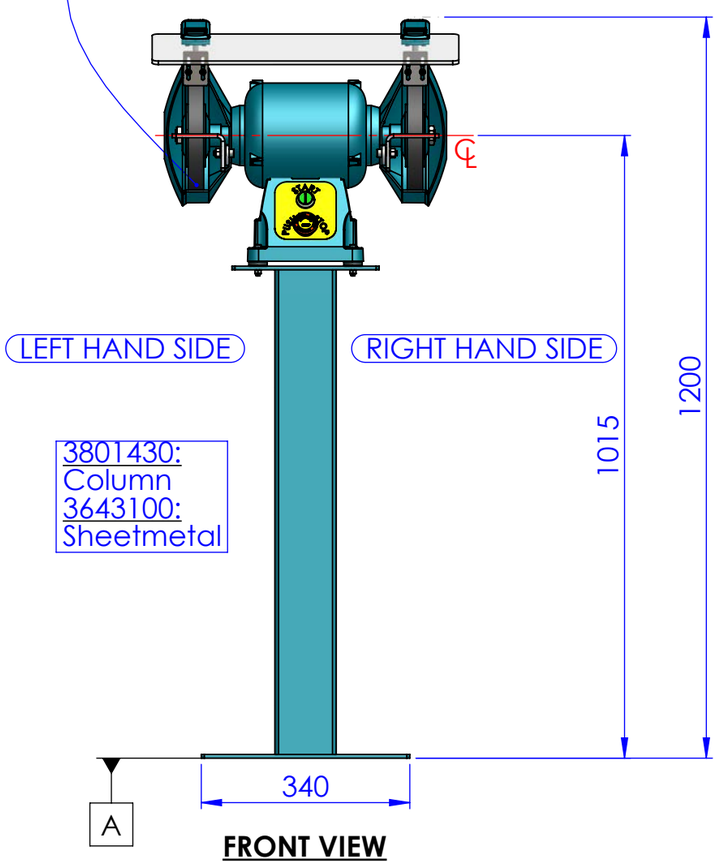

FRONT VIEW

ITEM NO.	PART NO.	DESCRIPTION	QTY.
1	3832060	Bench Grinder Base - Cast Iron	1
2	3635120	Rubber Buffer	4
3	3833060	Cover Base Plate - Bench Grinder	1
4	8725620	Pan Head Slotted Screw M5x10	8
5	3805170	Motor 1.1 kW , 50Hz 6.3A 240V	1
6	8705910	Rollpin 3x10	2
7	3841150	Flange Boss Assembly	2
8	3845310	Grinding Wheel 200x25x19.05 A60	2
9	3803160	Wheel Flange F8-750 (OUTSIDE)	2
10	3634150	NUT RH 3/4" x 20 TPI	1
11	3634140	NUT LH 3/4" x 20 TPI	1
12	3635160	BG Safety Eye Shield 500x170x6	1
13	3721060	BG Eye Shield Assembly	2
14	3801250	LHS Guard & Spark Arrestor Bracket 200HD	1
15	3803140	Guard 200 End Plate	2
16	3833010	BG Toolrest Arm	2
17	3833020	Grinder Tool Rest	2
18	3723010	BG Spark Arrestor	2
19	8705130	Socket Head Cap Screw M8x25	2
20	8705720	Hex Nut M8	2
21	8715200	Hex Head Set Screw 1/4 BSW x 3/4	8
22	3801260	RHS Guard & Spark Arrestor Bracket 200HD	1
23	3804260	Base Plate 340x340x6	1
24	3804270	Column 100x100x3 RHS x 790 L	1
25	3804250	Top Plate 240x240x6	1
26	8715370	Socket Head Cap Screw 1/4 BSW x 3/4	4

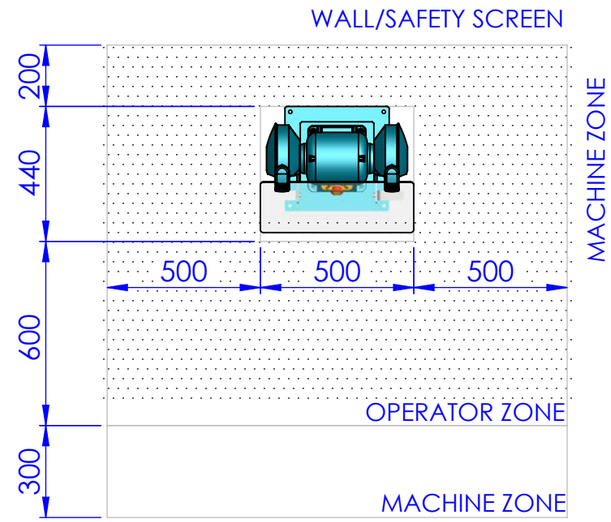

SAFE WORKING ZONE

DRAWN ANH
DATE 16.02.2021
MATERIAL:
WEIGHT:

UNLESS OTHERWISE SPECIFIED:
DIMENSIONS ARE IN MILLIMETERS
SURFACE FINISH:
TOLERANCES:
LINEAR:
ANGULAR:

BROBO GROUP
Address : 8 Fowler Rd, Dandenong VIC 3175
https://brobo.com.au/

TITLE:
200HD GRINDER ASSEMBLY

DO NOT SCALE DRAWING SCALE:1:8
DWG NO. BG02
REVISION 0
SHEET 1 OF 1 A3

ITEM NO.	PART NUMBER	DESCRIPTION	QTY.
23	3632020	Mounting Bracket Top Eyeshield	1
24	3734050	BG Ball Spindle	1
25	3633090	BG Ball Flange	1
26	3632030	Mounting Bracket - Bottom	1
27	8705800	Flat Washer M10	1
28	FASEM4X16PTBUT	Post Torx Button Screw M4x16	5
29	8715220	Hex Locknut M10	1
30	3635150	BG Eyeshield Spring	3

ITEM NO.	PART NUMBER	DESCRIPTION	QTY.
14	3833010	BG Toolrest Arm	2
15	8705720	Hex Nut M8	2
16	8705130	Socket Head Cap Screw M8x25	2
17	8715200	Hex Head Set Screw 1/4 BSW x 3/4	8
18	3723010	BG Spark Arrestor	2
19	8725620	Pan Head Slotted Screw M5x10	8
20	3501140	RH Guard & Spark Arrestor Bracket (250HD)	1
21	3841150	Flange Boss Assembly	2
22	8715370	Socket Head Cap Screw 1/4 BSW x 3/4	4

ITEM NO.	PART NUMBER	DESCRIPTION	QTY.
1	3832060	Bench Grinder Base - Cast Iron	1
2	3635120	Rubber Buffer	4
3	3833060	Cover Base Plate - Bench Grinder	1
4	3805170	Motor 1.1 kW , 50Hz 6.3A 240V	1
5	8705910	Rollpin 3x10	2
6	3505070	Grinding Wheel 250x25x19.05 A60	2
7	3803160	Wheel Flange F8-750 (OUTSIDE)	2
8	3634150	NUT RH 3/4" x 20 TPI	1
9	3634140	NUT LH 3/4" x 20 TPI	1
10	3721060	BG Eye Shield Assembly	2
11	3635160	BG Safety Eye Shield 500x170x6	1
12	3501130	LH Guard & Spark Arrestor Bracket (250HD)	1
13	3833020	Grinder Tool Rest	2

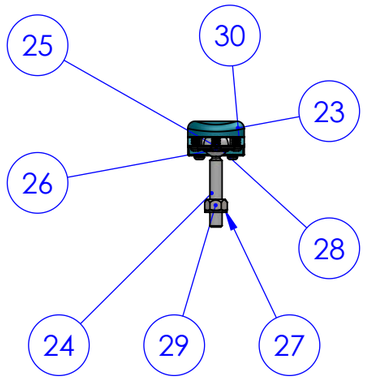

EYE SHIELD ASSEMBLY

OPTION
3505060 : GRINDING WHEEL 250x25x19.05 A46
3505070 : GRINDING WHEEL 250x25x19.05 A60

3801430 : COLUMN PEDESTAL
3643100: SHEETMETAL PEDESTAL

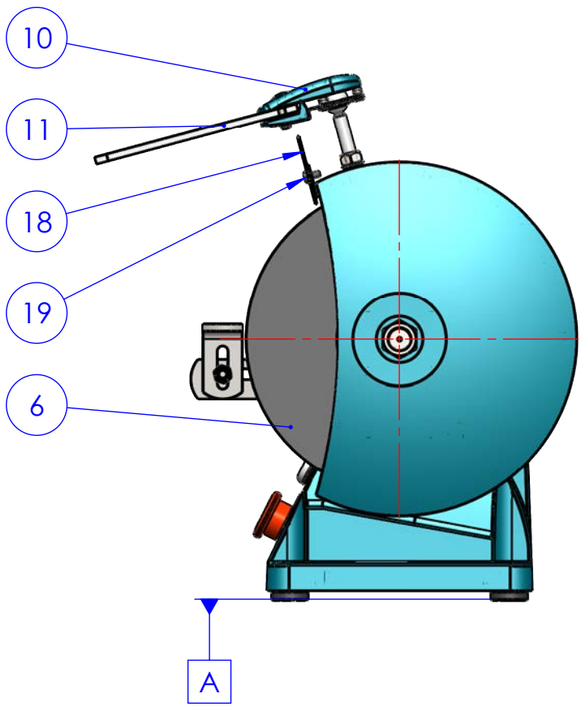

LEFT HAND SIDE

RIGHT HAND SIDE

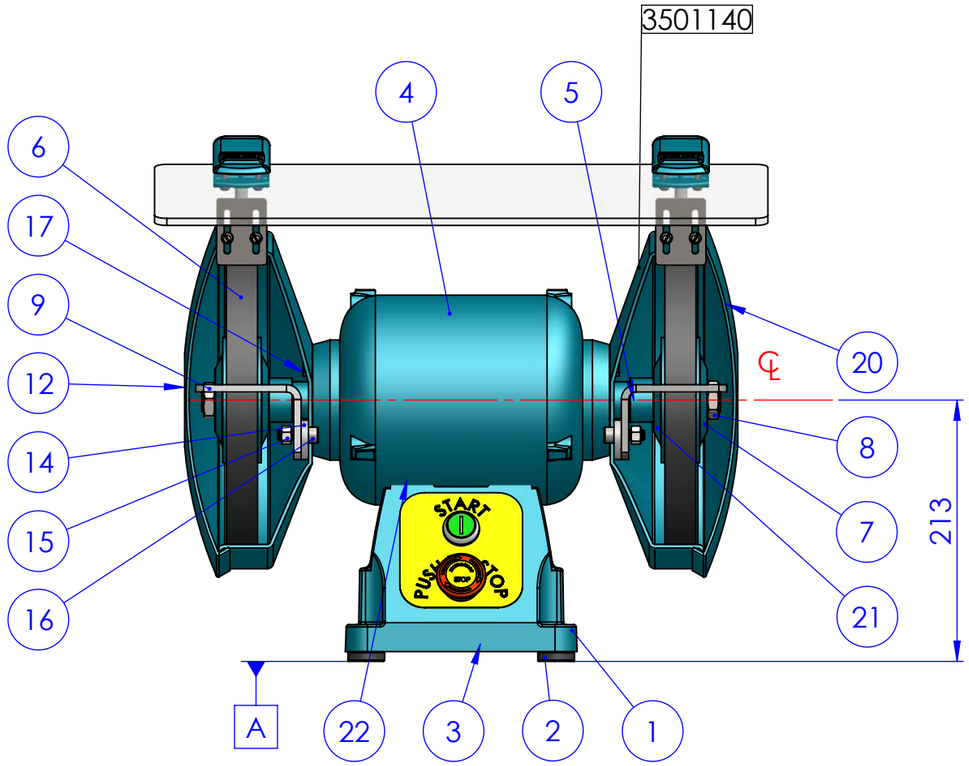

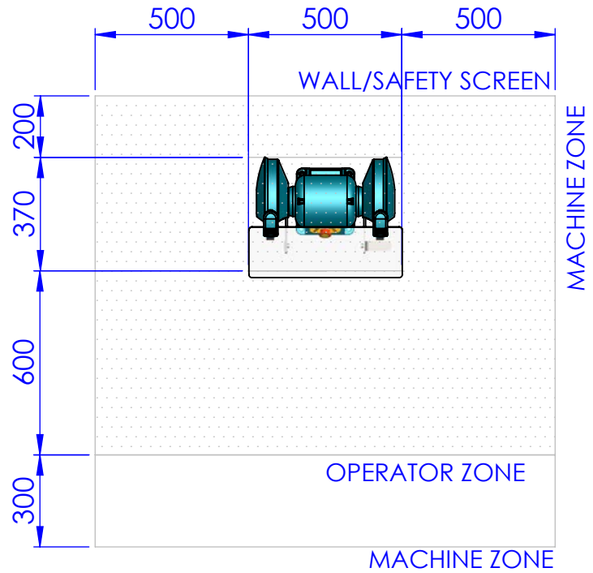

SAFE WORKING ZONE

DRAWN ANH
DATE 16.02.2021
MATERIAL:
WEIGHT:

UNLESS OTHERWISE SPECIFIED:
DIMENSIONS ARE IN MILLIMETERS
SURFACE FINISH:
TOLERANCES:
LINEAR:
ANGULAR:

BROBO GROUP
Address : 8 Fowler Rd, Dandenong VIC 3175
https://brobo.com.au/

TITLE:
250HD GRINDER ASSEMBLY

DO NOT SCALE DRAWING SCALE:1:5
DWG NO. BG03
REVISION 0
SHEET 1 OF 1 A3

ITEM NO.	PART NO.	DESCRIPTION	QTY.
1	3505170	Motor 1.1 kW , 50Hz 6.3A 240V	1
2	3803170	Bench Grinder Guard Flange Buff	2
3	3854050	Spindle Spacer	2
4	8715200	Hex Head Set Screw 1/4 BSW x 3/4	8
5	3804240	Spindle Spacer Extension	2
6	3634080	Taper Buff RH	1
7	3634070	Taper Buff LH	1

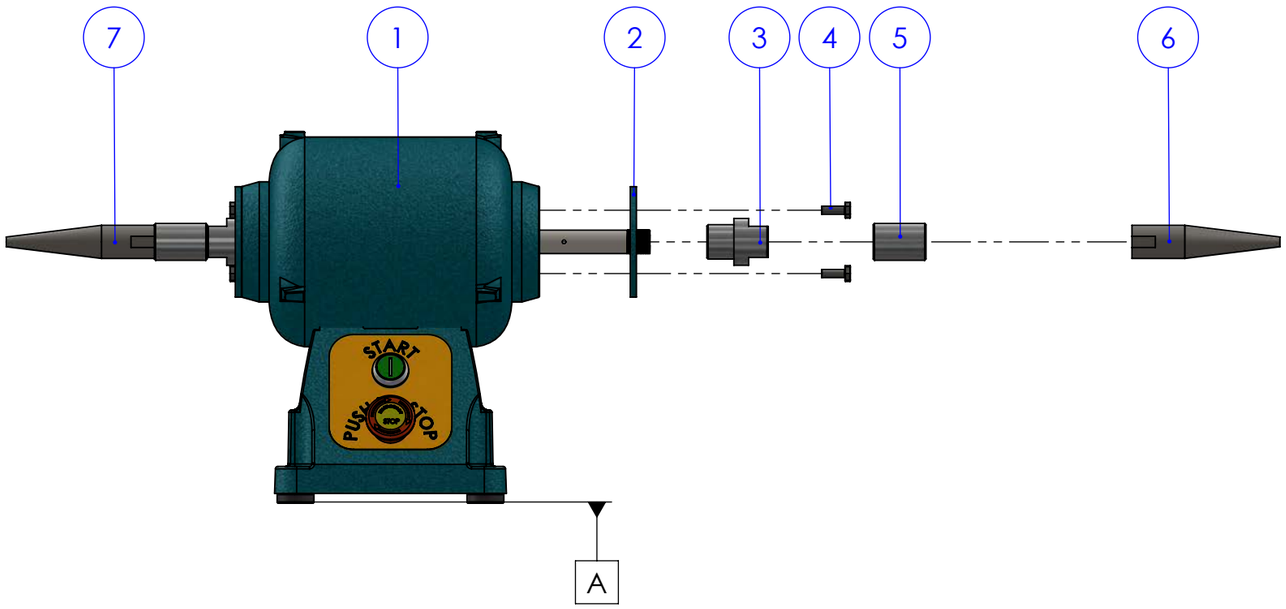

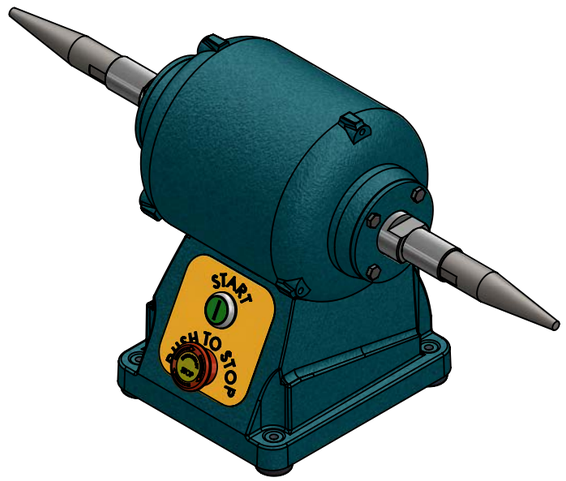

DRAWN ANH
DATE 26.06.2020
MATERIAL:
WEIGHT:

UNLESS OTHERWISE SPECIFIED:
DIMENSIONS ARE IN MILLIMETERS
SURFACE FINISH:
TOLERANCES:
LINEAR:
ANGULAR:

BROBO GROUP
Address : 8 Fowler Rd, Dandenong VIC 3175
https://brobo.com.au/

TITLE:

GRINDER BUFF ASSEMBLY

DO NOT SCALE DRAWING SCALE:1:5
DWG NO. BG04
REVISION 0
SHEET 1 OF 1 A3

ITEM NO.	PART NUMBER	DESCRIPTION	QTY.
1	3832060	Bench Grinder Base - Cast Iron	1
2	TN2BKR-1A	Start Push Button	1
3	TN2BKR-1BW	Stop/E-Stop Push Button	1
4	3635170	BG Start-Emergency Stop Label	1
5	3635120	Rubber Buffer	4
6	3833060	Cover Base Plate - Bench Grinder	1
7	8725620	Pan Head Slotted Screw M5x10	4
8	1045750	Cable Gland M16	1
9	C4C3PH	2.2 m Long 4 Core 1.5mm2 Flex Cable	1
10	9315230	Contactor 415 V	1

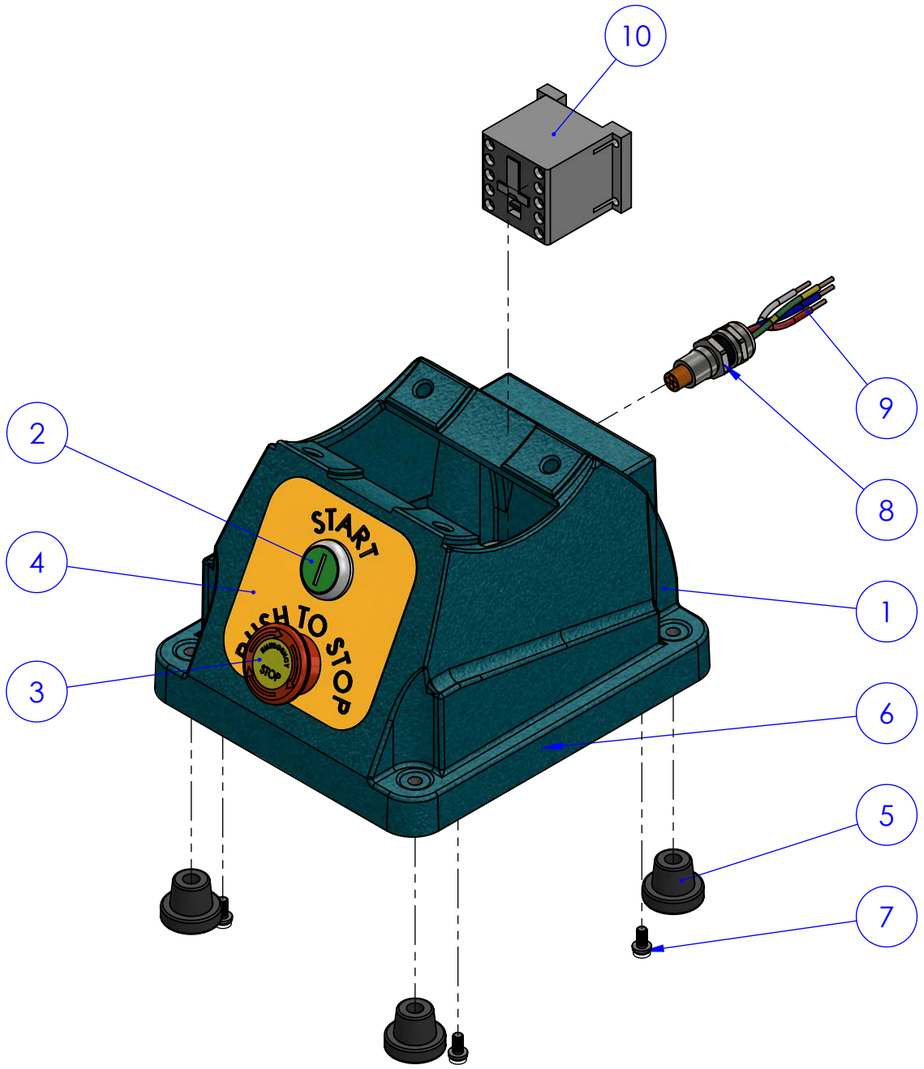

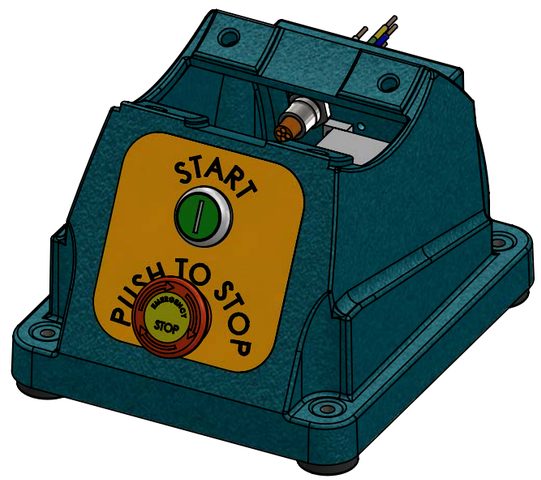

DRAWN ANH
DATE 01.05.2020
MATERIAL:
WEIGHT:

UNLESS OTHERWISE SPECIFIED:
DIMENSIONS ARE IN MILLIMETERS
SURFACE FINISH:
TOLERANCES:
LINEAR:
ANGULAR:

BROBO GROUP
Address : 8 Fowler Rd, Dandenong VIC 3175
https://brobo.com.au/

TITLE:

BENCH GRINDER BASE ASSEMBLY 3PH 415V

DO NOT SCALE DRAWING SCALE:1:3
DWG NO. 3832080
REVISION 0
SHEET 1 OF 2 A3

ITEM NO.	PART NUMBER	DESCRIPTION	QTY.
1	3832060	Bench Grinder Base - Cast Iron	1
2	TN2BKR-1A	Start Push Button	1
3	TN2BKR-1BW	Stop/E-Stop Push Button	1
4	3635170	BG Start-Emergency Stop Label	1
5	3635120	Rubber Buffer	4
6	3833060	Cover Base Plate - Bench Grinder	1
7	8725620	Pan Head Slotted Screw M5x10	4
8	1045750	Cable Gland M16	1
9	C4C3PH	2.2 m Long 4 Core 1.5mm2 Flex Cable	1
10	9315210	Contactor 240V	1
11	9505012	Capacitor 25 uF	1
12	3805420	Capacitor Clip	1

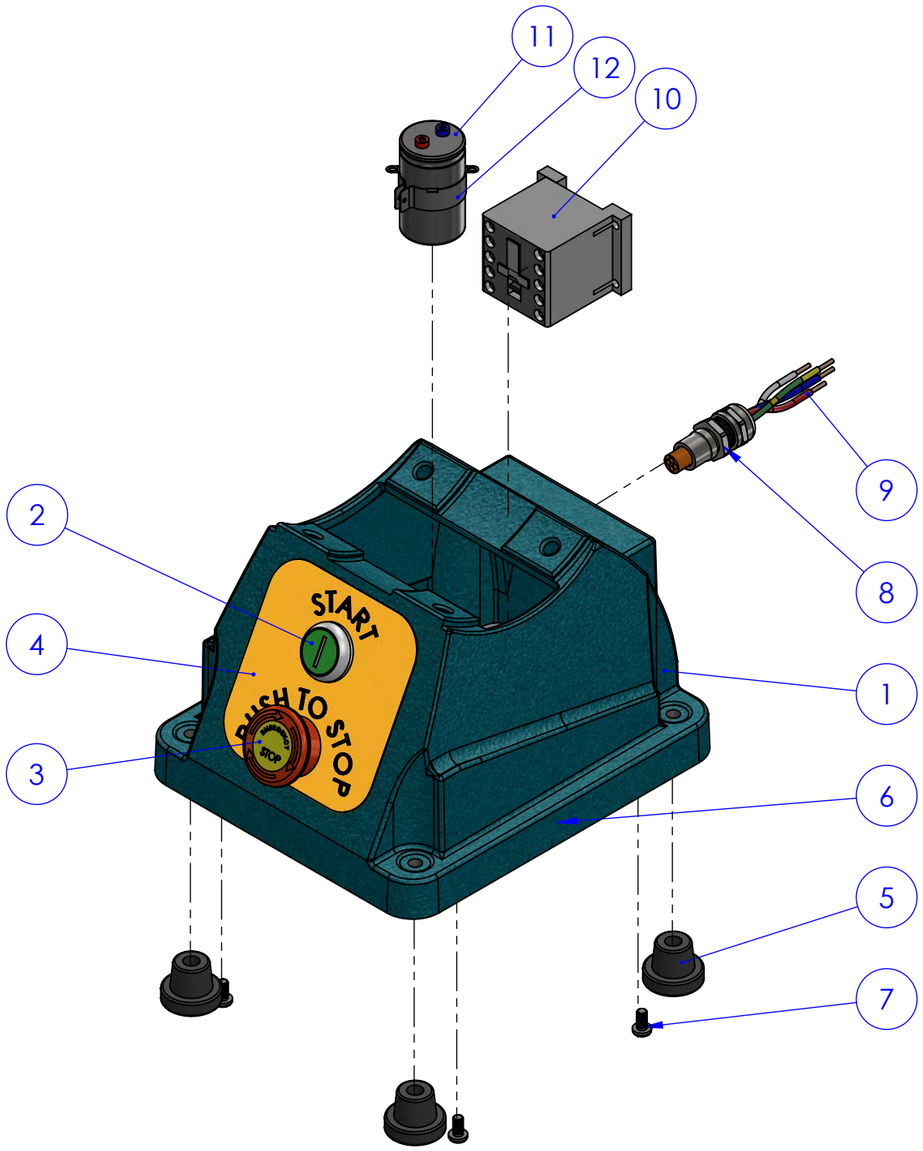

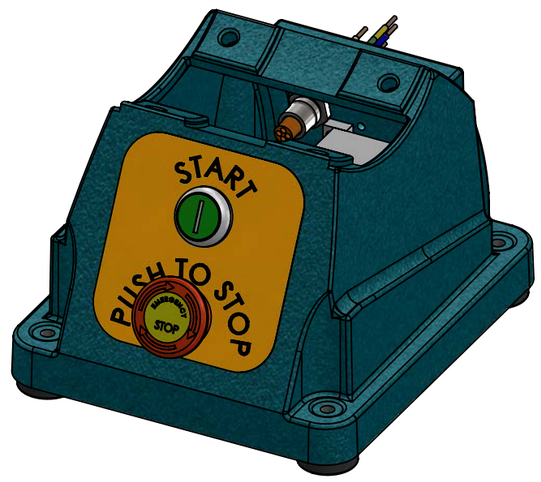

DRAWN ANH
DATE 01.05.2020
MATERIAL:
WEIGHT:

UNLESS OTHERWISE SPECIFIED:
DIMENSIONS ARE IN MILLIMETERS
SURFACE FINISH:
TOLERANCES:
LINEAR:
ANGULAR:

BROBO GROUP
Address : 8 Fowler Rd, Dandenong VIC 3175
https://brobo.com.au/

TITLE:
BENCH GRINDER BASE ASSEMBLY 1PH 240V

DO NOT SCALE DRAWING SCALE:1:3
DWG NO. 3832090
REVISION 0
SHEET 2 OF 2 A3

ITEM NO.	PART NUMBER	DESCRIPTION	QTY.
1	W90x30x400	90x30x400	3
2	W130x15x600	130x15x600	5

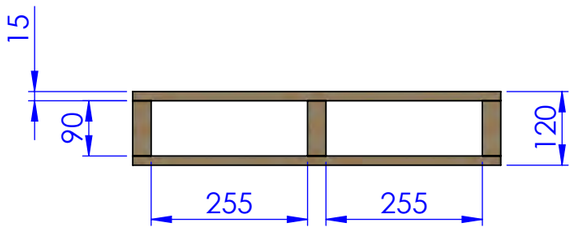

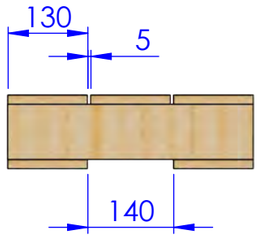

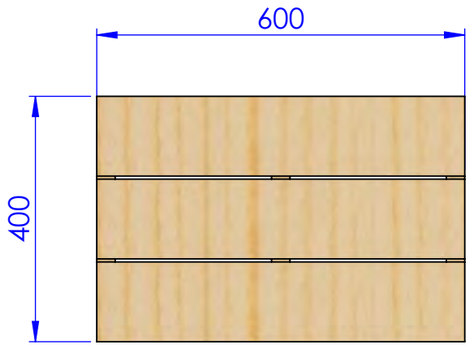

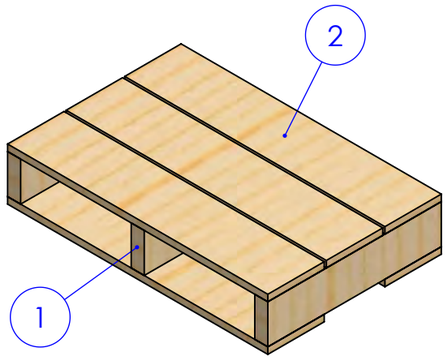

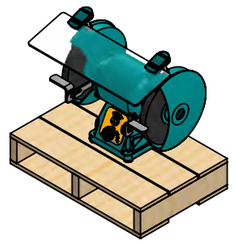

AS:4068-1993 Flat pallets for materials handling

TOLERANCES ON DIMENSIONS ARE METRIC	SIZE TO	MATCH	CAST*	GRADE	RA (µm)	GRADE	RA (µm)
DIMENSIONS ARE IN MILLIMETERS	6 mm	±0.1	±0.5	N1	0.025	N7	1.6
ANGULARITY TOLERANCE < ±0°10'	30 mm	±0.2	±0.5	N2	0.05	N8	3.2
CONCENTRICITY 0.1 mm	100 mm	±0.3	±1.5	N3	0.1	N9	6.3
REMOVE ALL BURRS & SHARP EDGES	300 mm	±0.5	±2.0	N4	0.2	N10	12.5
BY 0.3 x 45°	1000 mm	±0.6	±3.0	N5	0.4	N11	25.0
UNLESS OTHERWISE STATED	2000 mm	±1.2	±5.0	N6	0.8	N12	50.0

DRAWN BY ANH
DATE 09.12.2019

MATERIAL: -

WEIGHT:

BROBO GROUP
Address : 8 Fowler Rd, Dandenong VIC 3175
https://brobo.com.au/

TITLE:

SKID FOR BENCH GRINDER

DO NOT SCALE DRAWING SCALE:1:10

DWG NO.

8815030

REVISION 0

SHEET 1 OF 1 A3

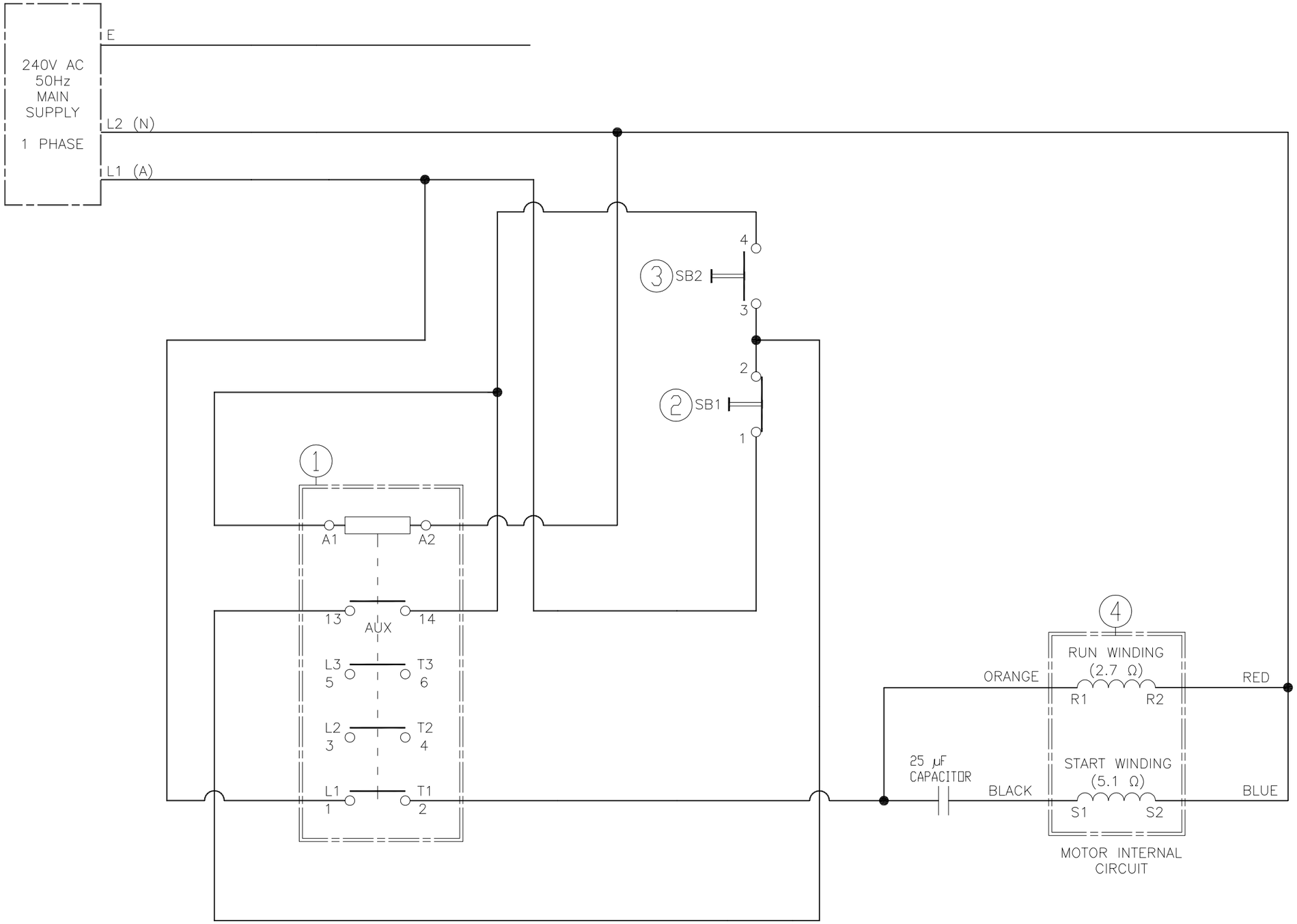

ONE PHASE HD GRINDER MOTOR ELECTRICAL SCHEMATIC – STANDARD

NO.		DESCRIPTION
1.	KM1	240V AC CONTACTOR
2.	SB1	STOP/E–STOP PUSH BUTTON N.C
3.	SB2	START PUSH BUTTON N.O
4.	M1	1.1 KW MOTOR 50Hz 240V AC 6.3A

TECHNICAL INFORMATION

CONTACTOR

EATON
DILEM–10
XTMC9A10

240V AC 50Hz
IP20

AS COLOUR CODE 1PH

A	ACTIVE	BROWN
N	NEUTRAL	LIGHT BLUE
E	EARTH	GREEN/YELLOW

REV	DATE	DESCRIPTION	DRA.	SIGN
0	08.06.2018	ISSUED	ANH	

DRAWN		
CHECK		
APPROVE		
ENGINEER	ANH	

PROJECT
HD GRINDER 1 PHASE – STANDARD

TITTLE
ELECTRICAL SCHEMATIC

BROBO GROUP
Address : 8 Fowler Rd,
Dandenong VIC 3175
http://brobo.com.au

SCALE NTS		REVISION 0
DWG NO.	E1805.HDG.S01	SHEET 1 OF 1

ITEM NO.	PART NO.	DESCRIPTION	QTY.
1	3505170	Motor 1.1 kW , 50Hz 6.3A 240V	1
2	3832060	Bench Grinder Base - Cast Iron	1
3	TN2BKR-1A	Start Push Button	1
4	TN2BKR-1BW	Stop/E-Stop Push Button	1
5	DILEM-10 XTMC9A10	240V AC Contactor	1
6	C25	Capacitor 25 uF	1
7	3805420	Capacitor Clip	1
8	1045750	Cable Gland M16	1
9	1035340	240V, 10A, 3 Pin Plug Lead Assembly	1

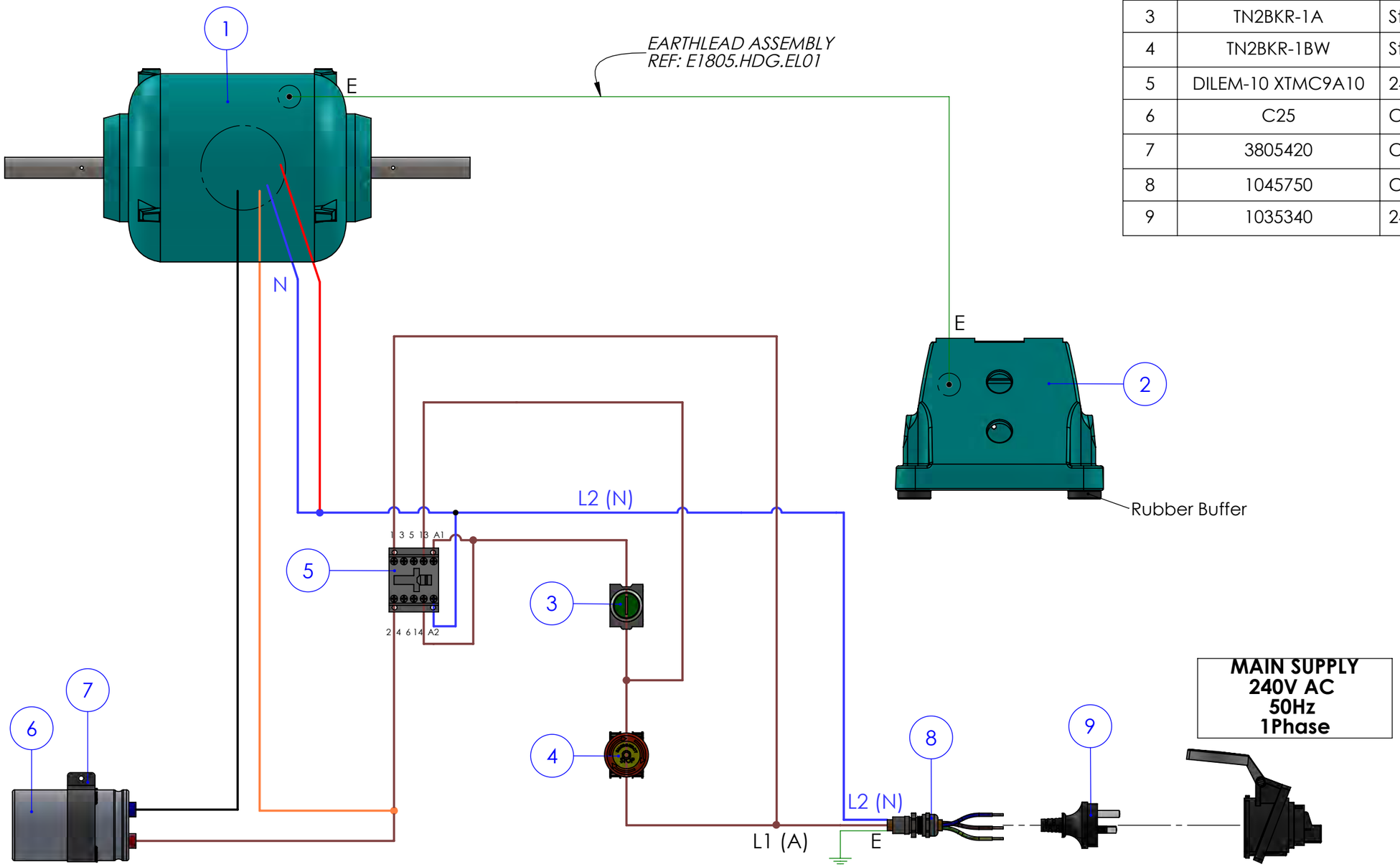

1PH HD BENCH GRINDER - STANDARD
ELECTRICAL COMPONENT DIAGRAM

1 CORE CABLE 1mm2
Active = Brown
Neutral = Light Blue
Earth = Green/Yellow

DRAWN ANH
DATE 08.02.2019
MATERIAL:
WEIGHT:

UNLESS OTHERWISE SPECIFIED:
DIMENSIONS ARE IN MILLIMETERS
SURFACE FINISH:
TOLERANCES:
LINEAR:
ANGULAR:

BROBO GROUP
Address : 8 Fowler Rd, Dandenong VIC 3175
https://brobo.com.au/

TITLE: 1PH HD GRINDER ELEC. COMPONENT - STANDARD

DO NOT SCALE DRAWING SCALE:1:5
DWG NO. E1805.HDG.C01
REVISION 0
SHEET 1 OF 1 A3

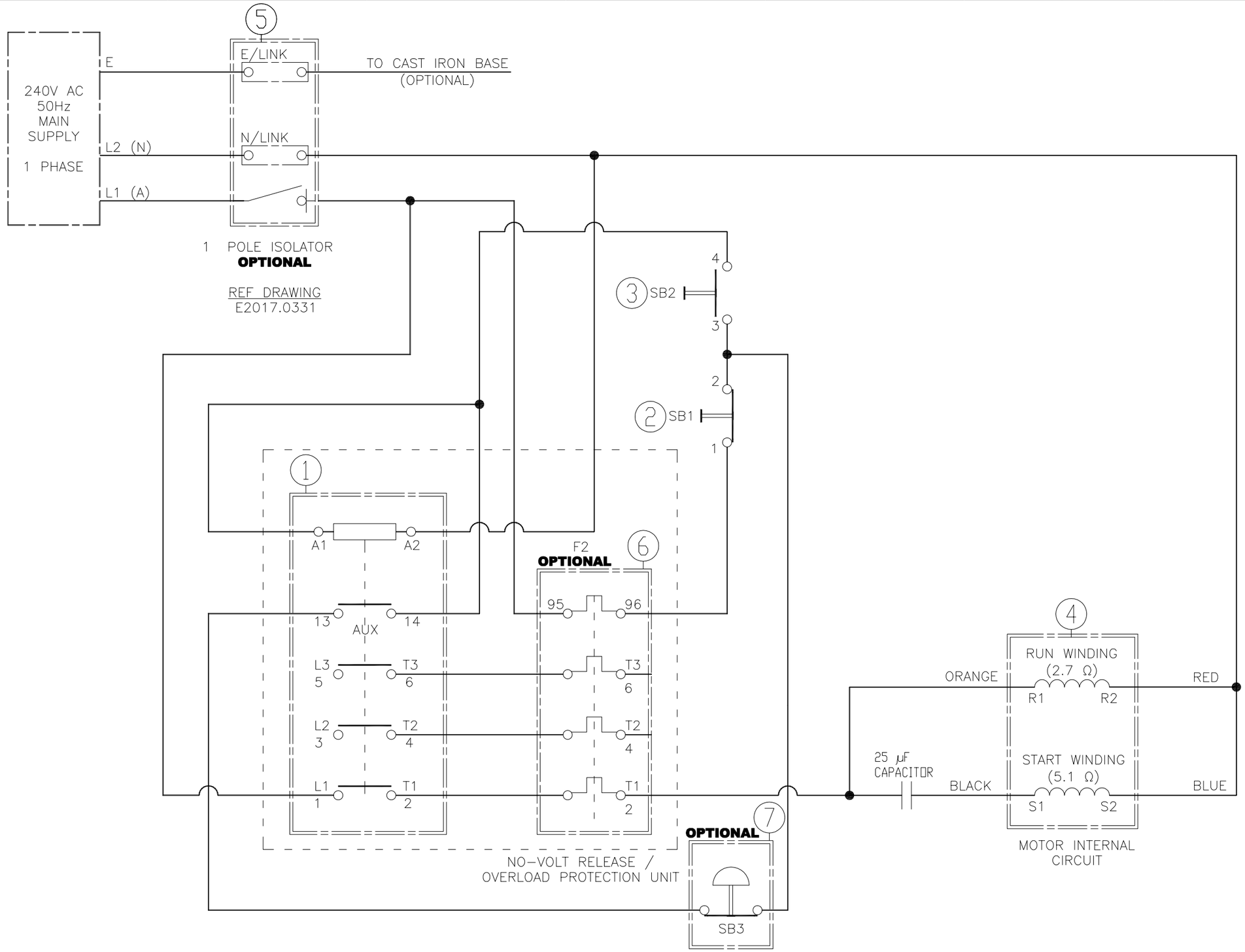

NO.		DESCRIPTION
1.	KM1	240V AC CONTACTOR
2.	SB1	STOP/E-STOP PUSH BUTTON N.C
3.	SB2	START PUSH BUTTON N.O
4.	M1	1.1 KW MOTOR 50Hz 240V AC 6.3A
5.		ISOLATOR SWITCH
6.	F2	OVERLOAD PROTECTION UNIT
7.	SB3	MUSHROOM E-FOOTSWITCH

OPTIONAL

OPTIONAL

TECHNICAL INFORMATION

CONTACTOR

EATON
DILEM-10
XTMC9A10

240V AC 50Hz
IP20

ISOLATOR - 1 POLE

GEN 3
MIS1-20
20A
500V
50Hz
IP66

OVERLOAD

EATON
ZE-6
XTOM006AC1

1.6A - 2.4A
IP20

A (AUTOMATIC)
H (HAND)

ONE PHASE HD GRINDER MOTOR ELECTRICAL SCHEMATIC - (OPTIONAL SAFETY FEATURES)

AS COLOUR CODE 1PH

A	ACTIVE	BROWN
N	NEUTRAL	LIGHT BLUE
E	EARTH	GREEN/YELLOW

REV	DATE	DESCRIPTION	DRA.	SIGN
0	12.06.2018	ISSUED	ANH	

DRAWN	
CHECK	
APPROVE	
ENGINEER	ANH

PROJECT
HD GRINDER 1 PHASE - OPTIONAL

TITTLE
ELECTRICAL SCHEMATIC

BROBO GROUP
Address : 8 Fowler Rd,
Dandenong VIC 3175
http://brobo.com.au

SCALE NTS	REVISION 0
DWG NO. E1805.HDG.S01.OPT	SHEET 1 OF 1

ITEM NO.	PART NO.	DESCRIPTION	QTY.
1	3505170	Motor 1.1 kW , 1PH 20V AC 6.3A	1
2	3832060	Bench Grinder Base - Cast Iron	1
3	TN2BKR-1A	Start Push Button	1
4	TN2BKR-1BW	Stop/E-Stop Push Button	1
5	DILEM-10 XTMC9A10	240V AC Contactor	1
6	C25	Capacitor 25 uF	1
7	3805420	Capacitor Clip	1
8	1045750	Cable Gland M16	1
9	1035340	240V, 10A, 3 Pin Plug Lead Assembly	1
10	MISI-20	1 Pole Isolator 20A 500V 50Hz IP66	1
11	XTOM006AC1	Overload 1.6A-2.4A	1
12	1041650	Mushroom Emergency Footswitch	1

OPTIONAL

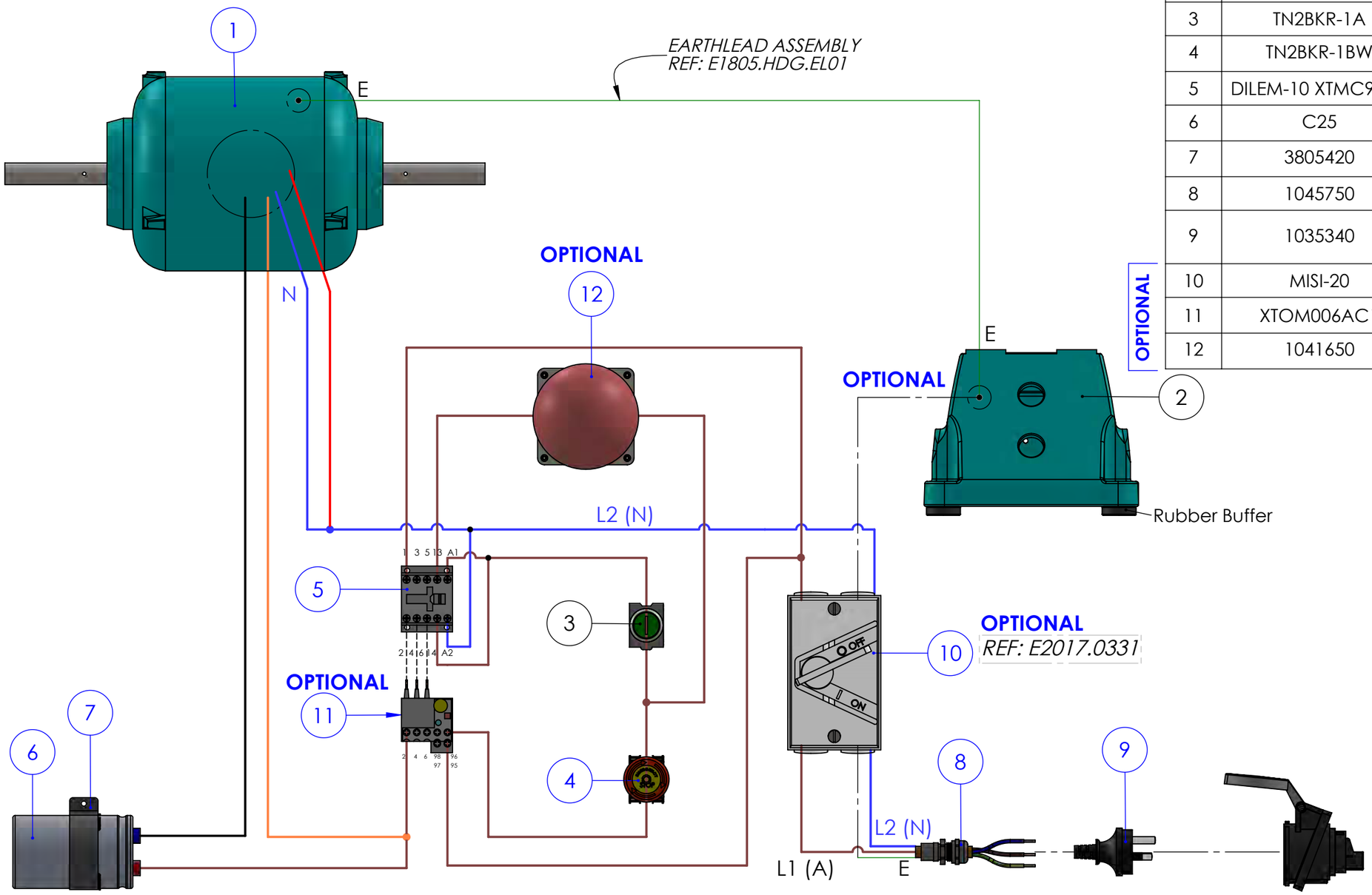

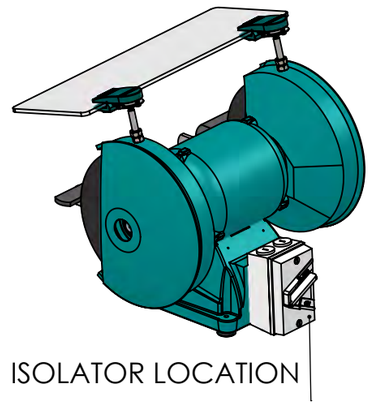

MAIN SUPPLY
240V AC
50Hz
1Phase

1PH HD BENCH GRINDER - OPTIONAL SAFETY FEATURES

ELECTRICAL COMPONENT DIAGRAM

1 CORE CABLE 1mm2
Active = Brown
Neutral = Light Blue
Earth = Green/Yellow

DRAWN ANH
DATE 08.02.2019
MATERIAL:
WEIGHT:

UNLESS OTHERWISE SPECIFIED:
DIMENSIONS ARE IN MILLIMETERS
SURFACE FINISH:
TOLERANCES:
LINEAR:
ANGULAR:

BROBO GROUP
Address : 8 Fowler Rd, Dandenong VIC 3175
https://brobo.com.au/

TITLE: 1PH HD GRINDER ELEC. COMPONENT - OPTIONAL

DO NOT SCALE DRAWING SCALE:1:5
REVISION 0
DWG NO. E1805.HDG.C01.OPT
SHEET 1 OF 1 A3

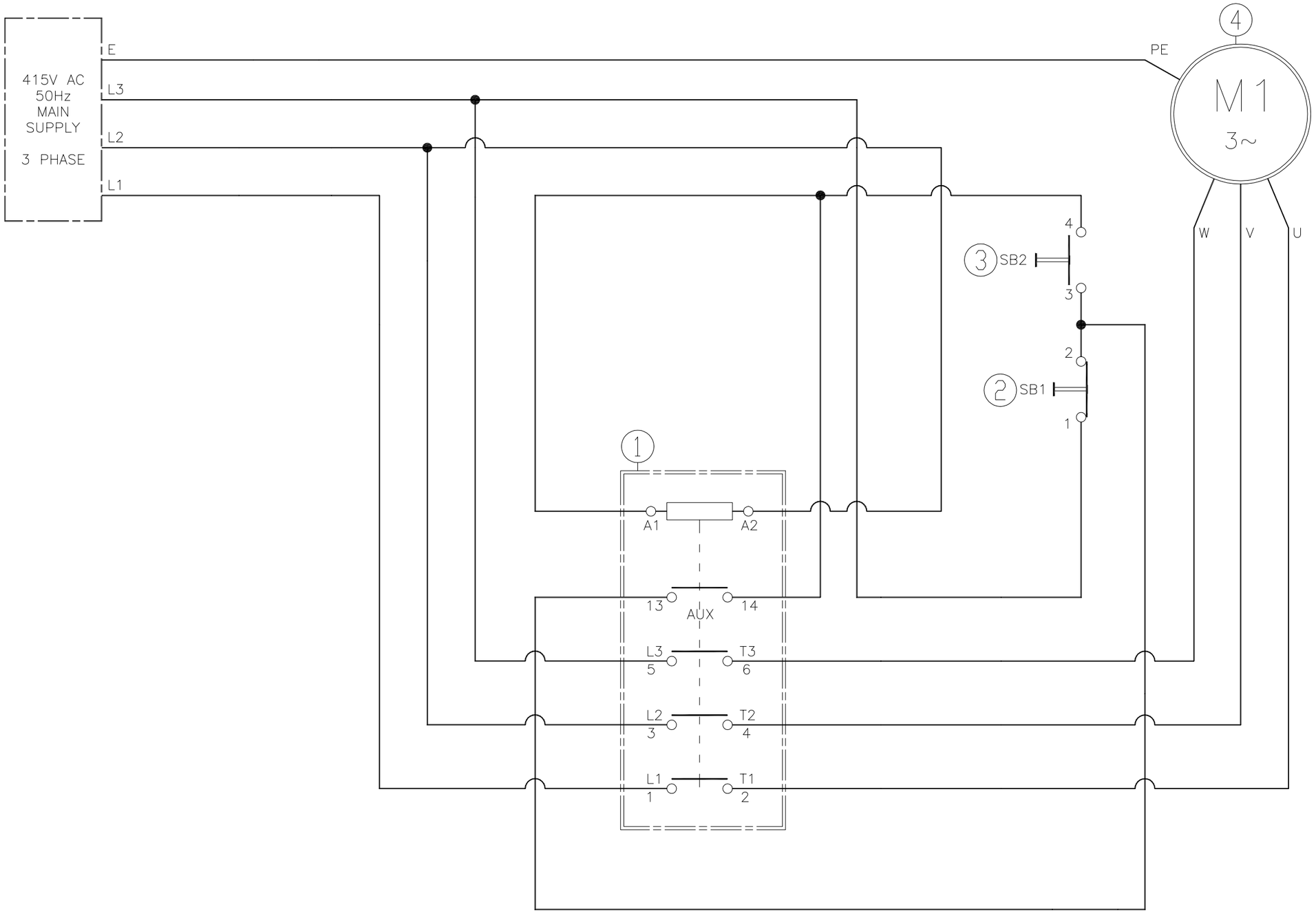

NO.		DESCRIPTION
1.	KM1	415V AC CONTACTOR
2.	SB1	STOP/E-STOP PUSH BUTTON N.C
3.	SB2	START PUSH BUTTON N.O
4.	M1	1.1 KW MOTOR 50Hz 415V AC 2.3A

TECHNICAL INFORMATION

CONTACTOR

EATON
DILEM-10
XTMC9A10

415V AC 50Hz
IP20

3 PHASE HD GRINDER MOTOR ELECTRICAL SCHEMATIC – STANDARD

AS COLOUR CODE 3PH

L1	ACTIVE	BROWN
L2	ACTIVE	WHITE
L3	ACTIVE	DARK BLUE
E	EARTH	GREEN/YELLOW

REV	DATE	DESCRIPTION	DRA.	SIGN
0	08.06.2018	ISSUED	ANH	

DRAWN		
CHECK		
APPROVE		
ENGINEER	ANH	

PROJECT
HD GRINDER 3 PHASE – STANDARD

TITTLE
ELECTRICAL SCHEMATIC

BROBO GROUP
Address : 8 Fowler Rd,
Dandenong VIC 3175
http://brobo.com.au

SCALE NTS		REVISION 0
DWG NO.	E1805.HDG.S03	SHEET 1 OF 1

ITEM NO.	PART NO.	DESCRIPTION	QTY.
1	3505140	Motor 1.1 kW , 50Hz 2.3A 415V 1 PHASE	1
2	3832060	Bench Grinder Base - Cast Iron	1
3	TN2BKR-1A	Start Push Button	1
4	TN2BKR-1BW	Stop/E-Stop Push Button	1
5	DILEM-10 XTMC9A10	415V Contactor	1
6	1045750	Cable Gland M16	1
7	4CC	2.2 m Long 4 Core 1.5mm2 Flex Cable	1

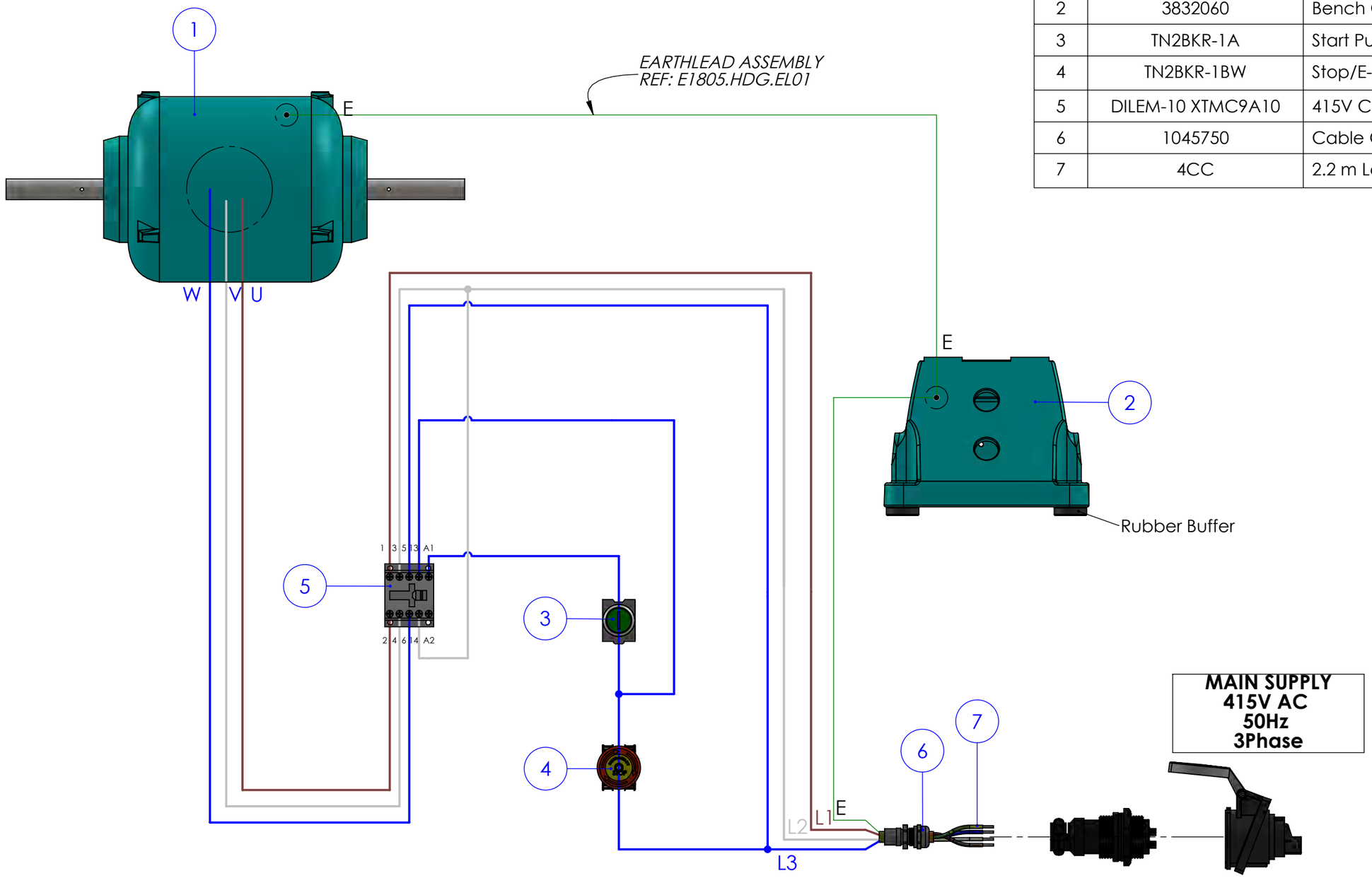

3 PHASE CABLE COLOUR CODE
L1 Brown
L2 White
L3 Dark Blue
Earth = Green/Yellow

3PH HD BENCH GRINDER -STANDARD
ELECTRICAL COMPONENT DIAGRAM

DRAWN ANH
DATE 08.02.2019
MATERIAL:
WEIGHT:

UNLESS OTHERWISE SPECIFIED:
DIMENSIONS ARE IN MILLIMETERS
SURFACE FINISH:
TOLERANCES:
LINEAR:
ANGULAR:

BROBO GROUP
Address : 8 Fowler Rd, Dandenong VIC 3175
https://brobo.com.au/

TITLE: 3PH HD GRINDER ELEC. COMPONENT - STANDARD

DO NOT SCALE DRAWING SCALE:1:5
DWG NO. E1805.HDG.C03
REVISION 0
SHEET 1 OF 1 A3

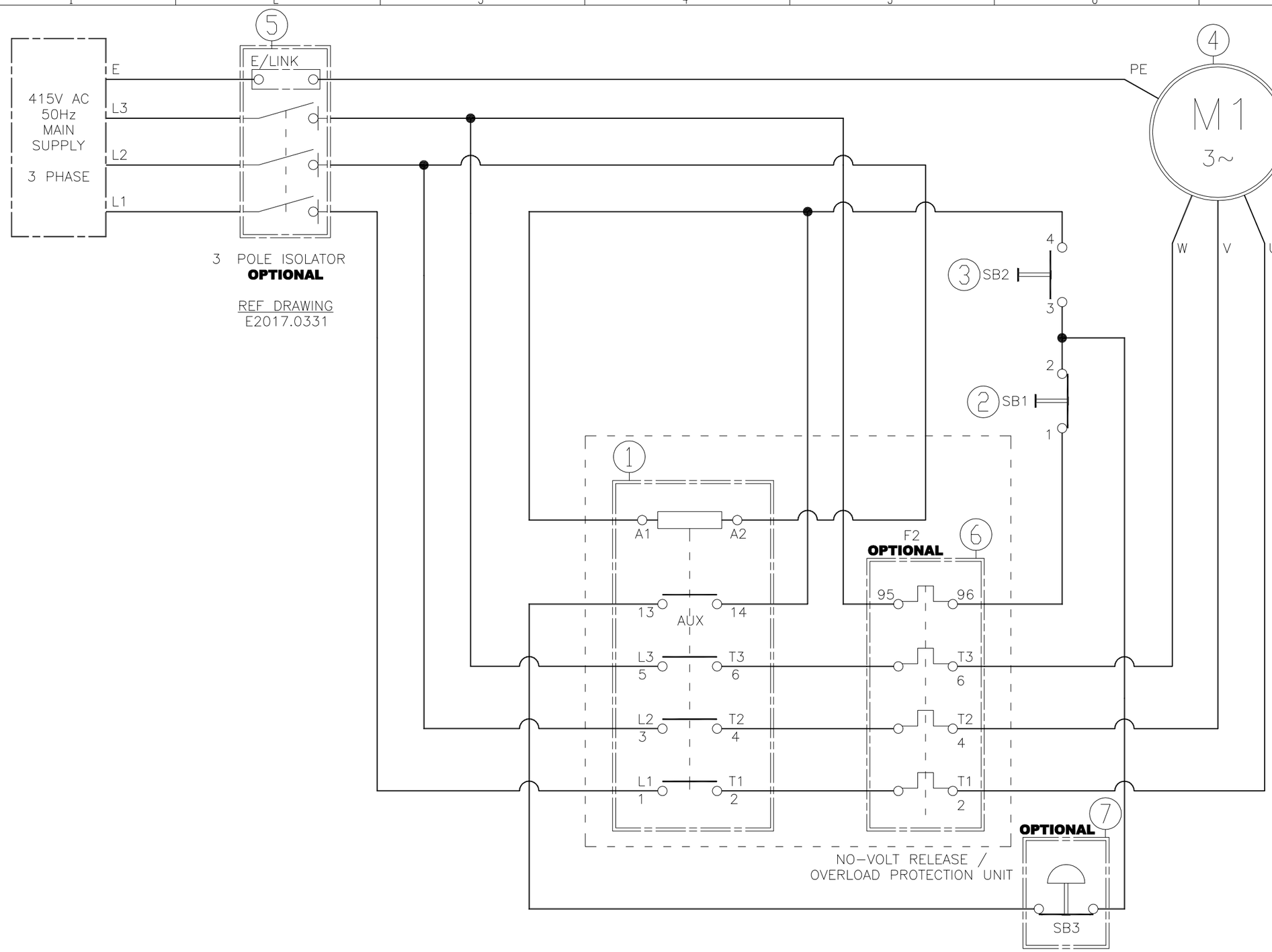

NO.		DESCRIPTION
1.	KM1	415V AC CONTACTOR
2.	SB1	STOP/E-STOP PUSH BUTTON N.C
3.	SB2	START PUSH BUTTON N.O
4.	M1	1.1 KW MOTOR 50Hz 415V AC 2.3A
5.		ISOLATOR SWITCH
6.	F2	OVERLOAD PROTECTION UNIT
7.	SB3	MUSHROOM E-FOOTSWITCH

OPTIONAL

OPTIONAL

TECHNICAL INFORMATION

CONTACTOR

EATON
DILEM-10
XTMC9A10

415V AC 50Hz
IP20

ISOLATOR – 3 POLES

GEN 3
MIS3-20
20A
500V
50Hz
IP66

OVERLOAD

EATON
ZE-6
XTOM006AC1

1.6A – 2.4A
IP20

A (AUTOMATIC)
H (HAND)

3 PHASE HD GRINDER MOTOR ELECTRICAL SCHEMATIC – (OPTIONAL SAFETY FEATURES)

AS COLOUR CODE 3PH

L1	ACTIVE	BROWN
L2	ACTIVE	WHITE
L3	ACTIVE	DARK BLUE
E	EARTH	GREEN/YELLOW

REV	DATE	DESCRIPTION	DRA.	SIGN
0	08.06.2018	ISSUED	ANH	

DRAWN	
CHECK	
APPROVE	
ENGINEER	ANH

PROJECT
HD GRINDER 3 PHASE – OPTIONAL

TITTLE
ELECTRICAL SCHEMATIC

BROBO GROUP
Address : 8 Fowler Rd,
Dandenong VIC 3175
http://brobo.com.au

SCALE NTS		REVISION 0
DWG NO.	E1805.HDG.S03.OPT	SHEET 1 OF 1

	ITEM NO.	PART NO.	DESCRIPTION	QTY.
	1	3505140	Motor 1.1 kW , 50Hz 2.3A 415V 1 PHASE	1
	2	3832060	Bench Grinder Base - Cast Iron	1
	3	TN2BKR-1A	Start Push Button	1
	4	TN2BKR-1BW	Stop/E-Stop Push Button	1
	5	DILEM-10 XTMC9A10	415V Contactor	1
	6	1045750	Cable Gland M16	1
	7	4CC	2.2 m Long 4 Core 1.5mm2 Flex Cable	1
OPTIONAL	8	MIS3-20	3 Pole Isolator 20A 500V 50Hz IP66	1
OPTIONAL	9	XTOM006AC1	Overload 1.6A-2.4A	1
OPTIONAL	10	1041650	Mushroom Emergency Footswitch	1

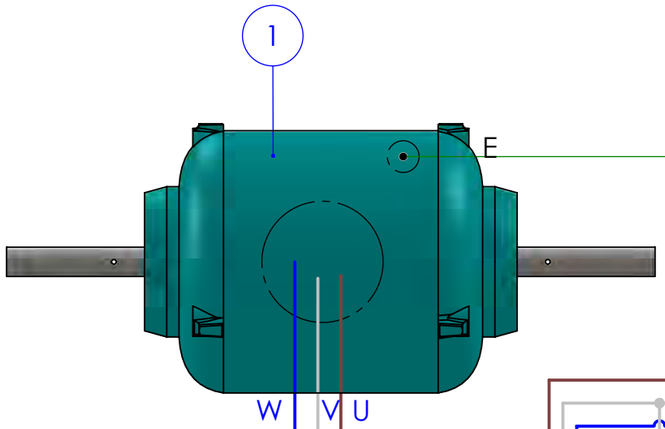

EARTHLEAD ASSEMBLY
REF: E1805.HDG.EL01

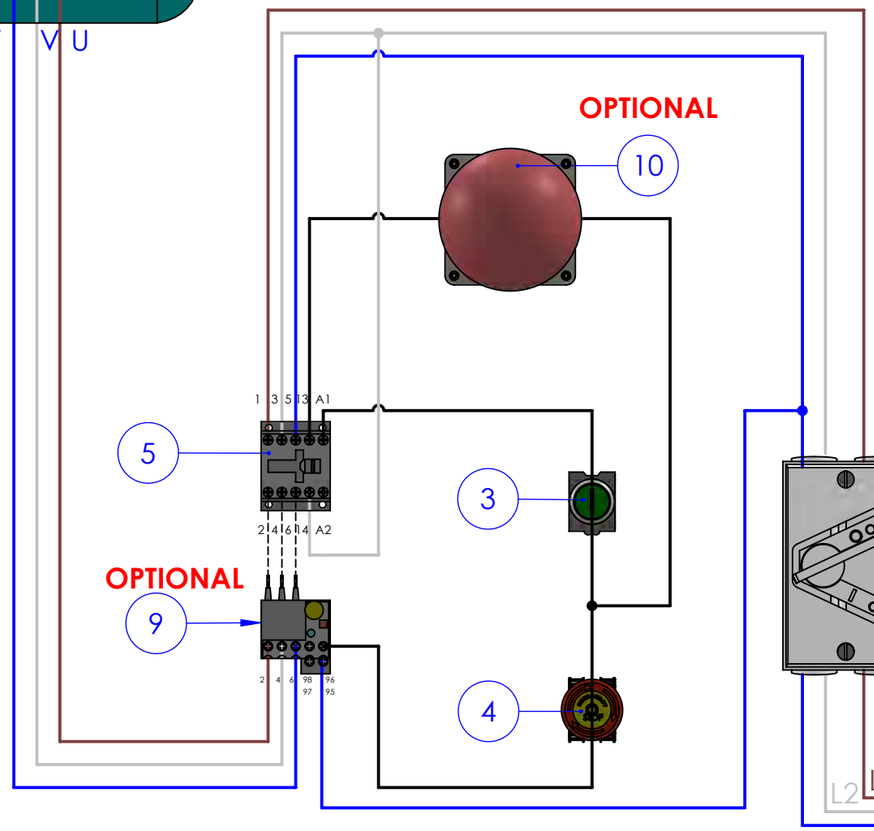

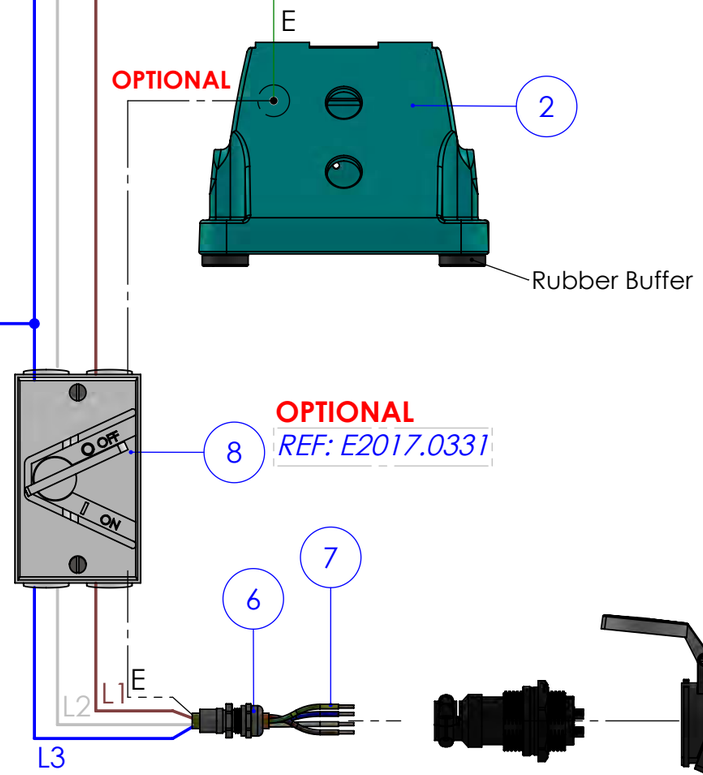

OPTIONAL
REF: E2017.0331

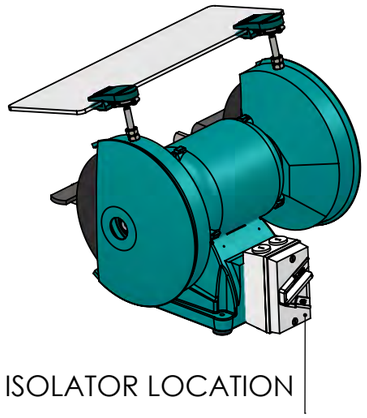

ISOLATOR LOCATION

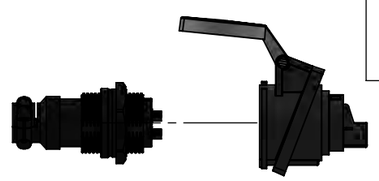

MAIN SUPPLY
415V AC
50Hz
3Phase

3PH HD BENCH GRINDER - OPTIONAL SAFETY FEATURES

ELECTRICAL COMPONENT DIAGRAM

3 PHASE CABLE COLOUR CODE

L1	Brown
L2	White
L3	Dark Blue
Earth = Green/Yellow	

DRAWN ANH
DATE 08.02.2019
MATERIAL:
WEIGHT:

UNLESS OTHERWISE SPECIFIED:
DIMENSIONS ARE IN MILLIMETERS
SURFACE FINISH:
TOLERANCES:
LINEAR:
ANGULAR:

BROBO GROUP
Address : 8 Fowler Rd, Dandenong VIC 3175
https://brobo.com.au/

TITLE: 3PH HD GRINDER ELEC. COMPONENT - OPTIONAL

DO NOT SCALE DRAWING SCALE:1:5
DWG NO. E1805.HDG.C03.OPT
REVISION 0
SHEET 1 OF 1 A3

EARTHLEAD ASSEMBLY BOM			
ITEM NO.	**PART NO.**	**DESCRIPTION**	**QTY.**
1	MBG	Bench Grinder Motor	1
2	8725650	Lock Washer ⌀5	2
3	8705770	Flat Washer ⌀5	4
4	EEM5	Earthlead Eyelet M5	3
5	PHSSM5x8	Pan Head Slotted Screw M5x8	1
6	3832060	Bench Grinder Base - Cast Iron	1
7	Din Rail	Zinc Plated Rail 55mm	1
8	PSSM5X10	Pan Head Slotted Screw M5x10	1
9	SCEC1	Single Core 1.0 mm2 Earth Cable 250mm	1

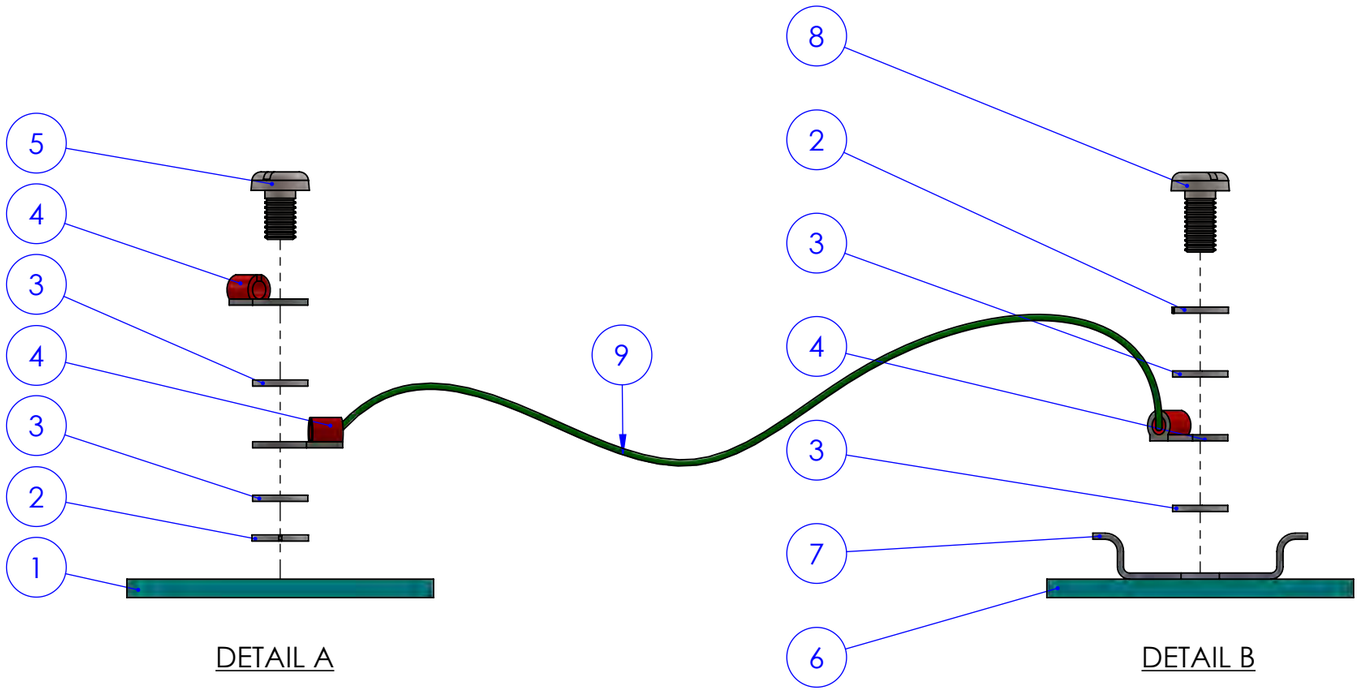

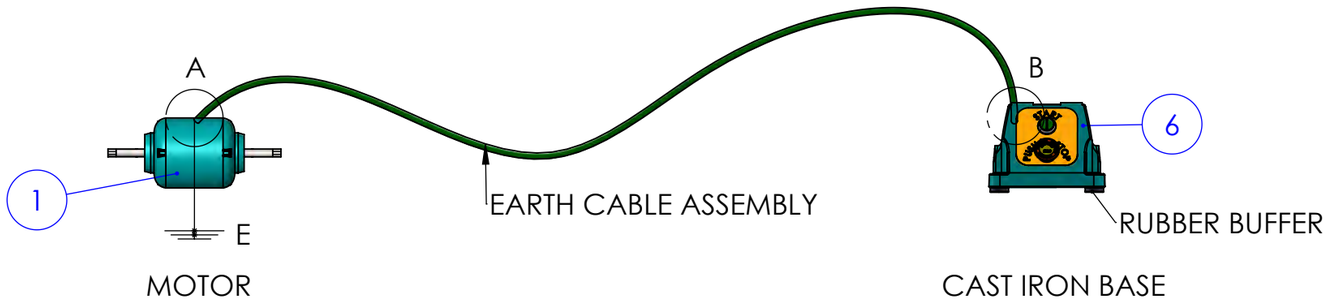

BENCH GRINDER EARTH LEAD ASSEMBLY

DRAWN ANH
DATE 21.02.2019
MATERIAL:
WEIGHT:

UNLESS OTHERWISE SPECIFIED:
DIMENSIONS ARE IN MILLIMETERS
SURFACE FINISH:
TOLERANCES:
LINEAR:
ANGULAR:

BROBO GROUP
Address : 8 Fowler Rd, Dandenong VIC 3175
https://brobo.com.au/

TITLE:
EARTH LEAD ASSEMBLY

DO NOT SCALE DRAWING SCALE:1:1
DWG NO. E1805.HDG.EL01
REVISION 0
SHEET 1 OF 1 A3

OPTIONAL

ISOLATOR: ONE PHASE

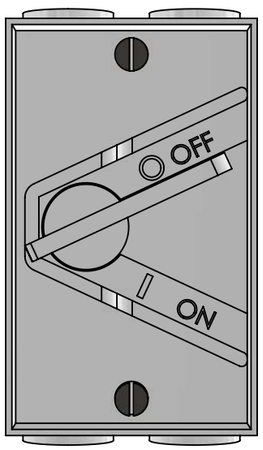

ISOLATOR: FRONT

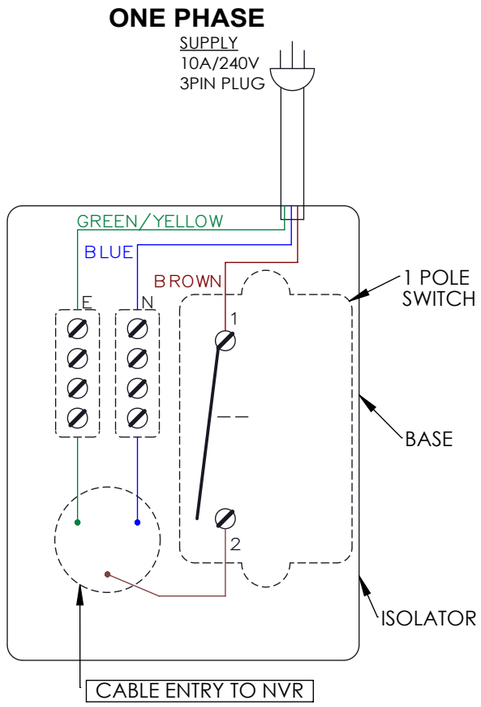

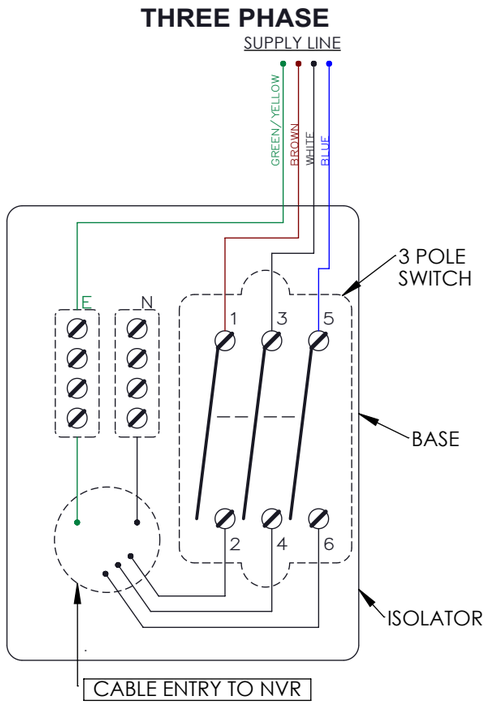

COMPONENT / SCHEMATIC / WIRING DIAGRAMS FOR CONNECTION FOR 1 PHASE OR 3 PHASE CIRCUIT ISOLATOR

DRAWN ANH
DATE 08.07.2020
MATERIAL:
WEIGHT:

UNLESS OTHERWISE SPECIFIED:
DIMENSIONS ARE IN MILLIMETERS
SURFACE FINISH:
TOLERANCES:
LINEAR:
ANGULAR:

BROBO GROUP
Address : 8 Fowler Rd, Dandenong VIC 3175
https://brobo.com.au/

TITLE:
ISOLATOR SCHEMATIC

DO NOT SCALE DRAWING SCALE:1:2
DWG NO.
E2017.0331
REVISION 0
SHEET 1 OF 1 A3

ITEM NO.	PART NUMBER	DESCRIPTION	QTY.
1	FAK-R/KC11/I	MUSHROOM FOOTSWITCH MOMENTARY	1
2	874510	FOOTSWITCH LEAD 32/020 x 3 METER	-
3	8745290	SP 16 CONDUIT x 2.6 METER	-
4	8745300	STRAIGHT ADAPTOR SP16/M16 B	2
5	874573	REDUCER M20/16	1
6	1041660	MOUNTING PLATE	1

OPTIONAL

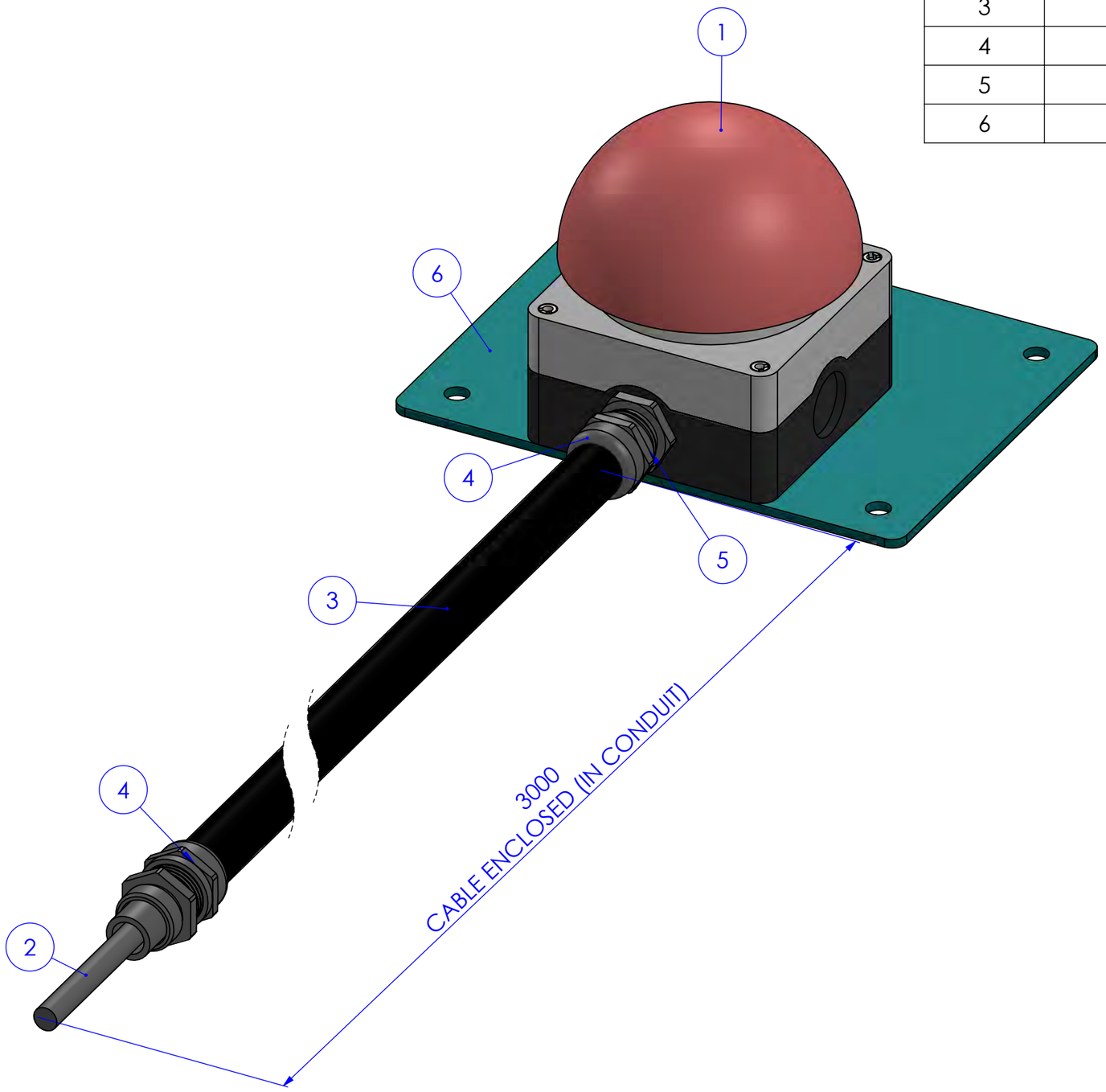

DRAWN ANH
DATE 08.02.2019
MATERIAL:
WEIGHT:

UNLESS OTHERWISE SPECIFIED:
DIMENSIONS ARE IN MILLIMETERS
SURFACE FINISH:
TOLERANCES:
LINEAR:
ANGULAR:

BROBO GROUP
Address : 8 Fowler Rd, Dandenong VIC 3175
https://brobo.com.au/

TITLE:

FOOTSWITCH KIT ASSEMBLY

DO NOT SCALE DRAWING SCALE:1:2
DWG NO. 1041650
REVISION 0
SHEET 1 OF 1 A3

CHAPTER 5 – Maintenance & Selection of Consumables

5.1. Role of the Operator

The person operating & maintaining the ***Brobo Group*** ***BENCH/BUFF GRINDERS 200HD & 250HD*** must familiarise themselves with these instructions for their own safety & that of the others, in addition to safeguarding the production of the machine. Responsibility must be taken by the user on the general maintenance & up keeping of the unit as specified in this chapter, with particular emphasis on:

- Check to ensure that other operators of the machine always aware of & comply with the relevant safety instructions & standards as specified in *Chapter 2 - Safety & Accident Prevention*. Therefore, check that the safety devices are operational & work perfectly & that personal safety requirement is complied with.

- Ensure that the working cycle is efficient & guarantees maximum productivity, inspect the:
  - Functions of the main components of the machine
  - Grade of buffing mops &/or grit on the grinding wheel
  - Correct working parameters for the type of material being ground

- Verify that the quality of the ground material meets the requirements & that the final product is free from any machining defects.

5.2. Maintenance Requirements

- All maintenance must be carried out with the power switched off & the machine in emergency stop condition.

- To guarantee for optimum operation, all spare parts must be Brobo Group originals.

- On completion of maintenance works, ensure that the replaced parts or any tools used have been removed from the machines before starting it up.

- Any behavior not in accordance with the instructions for using the machine specified in this manual may create hazards &/or safety risks for the operator.

- Therefore, read & follow all the instructions for use & maintenance of the machine & those on the product itself.

WARNING – SAFETY GEAR

Protective clothing, safety glasses and gloves should **always** *be worn while loading parts, operating the machine, or undertaking any maintenance work on the machine.*

5.3. General Maintenance of Functioning Components

The general maintenance operations that should be carried out regularly are as follows:

1) Keep the area around the grinder free of any tools, loose parts, accumulated swarf & small offcuts by using compressed air or preferably thread-free cloth.

2) When applicable, lightly lubricate the spindle shaft bearings with an NLGI 2 extreme pressure grease, Shell Alvania No.1 grease or equivalent.

3) Check that the clamping nut & counter plate regularly to ensure it's in good condition. Do not over tighten the nut & counter plate, as this will inadvertently exert tension on the spindle & grinding wheel.

4) Clean & lubricate any moving joints or sliding surfaces with good quality oil.

5) Clean the grinding machine regularly & keep any unpainted surfaces lightly oiled to protect from rust & corrosion.

6) Check that the glass eye shield is in good condition & free of any damage. If a crack is present on the surface of the glass, immediately replace the eye shield by contacting the Brobo Engineering Department.

5.4. Replacing grinding wheels.

The following procedure is recommended for the replacement of the grinding wheels:

1) Depress the STOP button
2) Switch off the power point or main isolator switch.
3) Install a lockout caliper on the plug or isolator switch.
4) Remove the fixed guards from the grinder wheel surrounds.
5) Fit a soft jaw clamp as a sprag, across the narrow side of each grinding wheel on both sides.
6) Use a ring spanner or socket at each end of the spindle & loosen the nuts,
   (NOTE, the L.H. side spindle is a L.H. thread).
7) Remove the grinding wheels whilst noting to correct location of any adapters that may be installed between the spindle & wheels.
8) Install new grinding wheels ensuring correct placement of the counter plates.
9) Tighten both clamping nuts taking care not to overtighten the nuts causing distortion to the counter plates or spindle threads. (Approximately a further 90 degrees of rotation to the nuts is required once seated).
10) Rotate the grinding wheel & spindle assembly by hand to ascertain true & balanced rotation.
11) Replace & secure both grinding wheel surround guards.
12) Reconnect power, release the STOP button.
13) Test start the unit by “jogging” the start button. Keep vigil on initial start-up for problems.
    Switch off immediately any problems are detected.

CHAPTER 6 - Troubleshoot

Below lists of some of the most common problems associated with the ***Brobo Group 200HD/250HD Bench/Buff Grinder*** & the recommended troubleshooting procedures to undertake to rectify the situation. If the solutions provided do not resolve the problems, or the problem identified differs from those listed, ***immediately*** contact Brobo Group engineering department.

PROBLEM IDENTIFIED	DIAGNOSIS	SOLUTIONS
Excessive consumption of grinding wheel/cracking of grinding wheel	Incorrect grade of grit on grinding wheel for parent material	Verify that the correct grade of grinding is suited for the parent material being ground.
	Excessively feed rate, forcing the parent material onto the grinding wheel	Reduce the feed rate onto the grinder, else it might cause the parent material to break & cause harm to the operator.
	Cracking due to sudden force onto grinding wheel ('jarring' of grinding wheel)	Do not abruptly force the parent material onto the grinding wheel. Instead, the material should be fed onto the grinding wheel at a steady but constant rate.
Minimal material removed on the parent part when fed onto the grinder wheel	Clogged or worn grinding wheel	Replace the grinding wheel.
	Incorrect grade of grit on grinding wheel for parent material	Verify that the correct grade of grinding is suited for the parent material being ground.
The machine would not operate	Broken or worn component	All components of the grinder are sold as spare parts (pending availability). Please contact your nearest Brobo distributor or our Brobo Group head office. Please visit www.brobo.com.au for more details.
	The electrical component is worn	All electrical components to the grinder are sold as spare parts (pending availability). Please contact your Brobo distributor. Please also visit www.brobo.com.au for more details.

BROBO GROUP©
A.C.N. 098 264 316
A.B.N. 42 098 264 316
BROBO GROUP (AUST) PTY. LTD.
8 Fowler Rd, Dandenong South, 3175
Victoria, AUSTRALIA.
Tel: 61 3 9794 8751
Fax: 61 3 9794 8792
Email: info@brobo.com.au
Website: www.brobo.com.au

APPENDIX - RISK/HAZARD ASSESSMENT

Hazard Type	Hazard Identification	Hazard Assessment	Hazard Management Strategies (Recommended for the Purchasing / Buyer / User)
Mechanical	Cutting/Severing	Med/High	Keep machine correctly guarded & operational at all times. Keep hands clear of rotating spindle/grinding wheel.
	Entanglement	Low	Do not wear loose jewelry, clothing or items that might get caught in the grinder. Always keep the work area free of unnecessary objects or tools.
	Impact	Low	Wear protective safety glasses when utilizing the grinding machine. Strongly encouraged that steel-capped safety boots be worn during operation of grinder machine.
Electrical	Electrocution	Low	Remove the power supply when any maintenance &/or repairs are to be undertaken. The power source is to be isolated prior to opening electrical enclosures.
Noise	-	Low	Under no load testing, the noise level measured is below 80db (A). If the noise level becomes too high during a grinding cycle, stop the process & inspect for the problem, if any are present.
Substance	-	Low	Keep the work area clean & regularly remove excess coolant, oils, & another aggregate.
Hazardous Events	Unexpected Start-Up	Low	During a power failure, turn the machine off. If the problem persists, please contact Brobo Group engineering department.
Additional Hazards	Operator Error	Low	Ensure grinder wheel, counter plates & locking nuts are correctly secured.

MACHINE TYPE: _____

SERIAL NO.: _____

RECEIVING COMPANY: _____ (SAFETY OFFICER)

APPENDIX 1 – MAINTENANCE SCHEDULE

Item	Action	Daily	Monthly	6 Monthly
Work rests.	**#See 3.2.1.**	**Check**	**Adjust**	**Adjust**
Grinding wheels for damage or undue wear	**#See 3.2.2 & 3.2.3**	**Check**	**Check**	**Check**
Inspect one piece eye shield	**Replace if damaged**	**Check**	**Check**	**Check**
Inspect guards	**Replace if damaged**	**Check**	**Check**	**Check**
Inspect safety & operating instruction signs	**Replace if damaged**	**Check**	**Check**	**Check**
Test & Tag	**Licensed electrician**			**Check**
Inspect fixings and hardware	**Replace & or re torque**	**Check**	**Check**	**Check**

APPENDIX 2 – SERVICE LOG

	SERVICE TYPE				
DATE	**Scheduled**	**Fault**	**DESCRIPTION**	**INITIALS**	**COMPLETED**

APPENDIX 3 - RISK ASSESSMENT

phone : 03 9646 0460
fax : 03 9646 0460
email : info@avgoservices.com
web : www.avgoservices.com
P.O. Box 5089, Port Melbourne, Victoria 3207

avgo services

CONTENTS

SCOPE 18
METHOD 18
HAZARD 18
RISK 18
RISK CATEGORY MATRICES 19
RISK CATEGORY MATRICES (CONTINUED) 20
RISK SCORE CALCULATIONS 21
CONTROL RECOMMENDATIONS 22
CONTROL STANDARD 22
RE-SCORE 22
TERMS OF REFERENCE 22
FOLLOW UP 22
HAZARD RISK ASSESSMENT MAKE: BROBO 200 / 250MM HD OHS SERIES BENCH GRINDER 23
MANUFACTURERS' SERIAL NUMBER. GROUP B29600 TO B99999 23

CONSULTANT: THEO AVGOULIS (ASSOCIATE SIA)

SCOPE

A risk assessment program of plant items was commenced on behalf of Brobo Pty. Ltd. Dandenong South during March 2009. The assessment was commissioned by Mr David Golic. Plant items assessed were located within the manufacturing facility located at 66-68 Williams Rd. Plant assets inspected were as per the Operating Maual for 200 / 250 HD OHS Series Bench Grinder Sn. B 29600 to B99999

As far as practicable, risks have been assessed against relevant Australian Standards, the Code of Practice for Plant No. 19, 1 July 1995. The Risk Assessments are completed under the "Generic" classification as defined by the Code.

METHOD

HAZARD

Parts, accessories, components or other items together with the likely use, materials used as part of the process, cleaning procedures and maintenance procedures are some of the items given due consideration as to the likelihood of presenting Health and Safety risks to personnel . These items identified as hazards are described under the heading of "Hazard". *The Hazard listed in column 1 of the Risk Assessment.*

RISK

The level of the Risk associated with each Hazard is based on AS 4360 Risk Management, consistent with Worksafe Victoria guidelines.

The qualitative measures are:

6	• Catastrophic (multiple deaths, loss over $1,000,000)
5	• Disaster (single death, loss to $1,000,000)
4	• Very serious (Permanent disability, loss to $1,000,000)
3	• Serious (extensivemedical treatment required, lost time >7 days, loss to $500,000)
2	• Substantial (medical treatment, lost time <7 days
1	• Minor (first aid treatment, lost time < 1 day)

RISK CATEGORY MATRICES

Catastrophic 6		Exposure					
		1 Very Rare	2 Rare	3 Infrequent	4 Occasional	5 Frequent	6 Continuous
Probability	6 Almost Certain	V	V	V	V	V	V
	5 Quite possible	H	V	V	V	V	V
	4 Unusual but possible	S	H	V	V	V	V
	3 Remotely Possible	M	S	H	H	V	V
	2 Conceivable	L	M	S	S	H	V
	1 Practically Impossible	L	L	L	L	M	S

Disaster 5		Exposure					
		1 Very Rare	2 Rare	3 Infrequent	4 Occasional	5 Frequent	6 Continuous
Probability	6 Almost Certain	H	V	V	V	V	V
	5 Quite possible	S	H	V	V	V	V
	4 Unusual but possible	M	S	H	V	V	V
	3 Remotely Possible	L	M	S	S	H	V
	2 Conceivable	L	L	M	M	S	H
	1 Practically Impossible	L	L	L	L	L	M

Very Serious 4		Exposure					
		1 Very Rare	2 Rare	3 Infrequent	4 Occasional	5 Frequent	6 Continuous
Probability	6 Almost Certain	S	H	V	V	V	V
	5 Quite possible	M	S	H	V	V	V
	4 Unusual but possible	L	M	S	H	V	V
	3 Remotely Possible	L	L	M	M	S	H
	2 Conceivable	L	L	L	L	M	S
	1 Practically Impossible	L	L	L	L	L	L

RISK CATEGORY MATRICES (CONTINUED)

Serious 3		Exposure					
		1 Very Rare	2 Rare	3 Infrequent	4 Occasional	5 Frequent	6 Continuous
Probability	6 Almost Certain	M	S	H	V	V	V
	5 Quite possible	M	M	S	H	V	V
	4 Unusual but possible	L	M	M	S	H	V
	3 Remotely Possible	L	L	L	M	M	S
	2 Conceivable	L	L	L	L	M	M
	1 Practically Impossible	L	L	L	L	L	L

Substantial 2		Exposure					
		1 Very Rare	2 Rare	3 Infrequent	4 Occasional	5 Frequent	6 Continuous
Probability	6 Almost Certain	L	M	S	H	V	V
	5 Quite possible	L	L	M	S	H	H
	4 Unusual but possible	L	L	L	M	M	S
	3 Remotely Possible	L	L	L	L	L	M
	2 Conceivable	L	L	L	L	L	L
	1 Practically Impossible	L	L	L	L	L	L

Minor 1		Exposure					
		1 Very Rare	2 Rare	3 Infrequent	4 Occasional	5 Frequent	6 Continuous
Probability	6 Almost Certain	L	L	L	L	M	S
	5 Quite possible	L	L	L	L	L	M
	4 Unusual but possible	L	L	L	L	L	L
	3 Remotely Possible	L	L	L	L	L	L
	2 Conceivable	L	L	L	L	L	L
	1 Practically Impossible	L	L	L	L	L	L

In some instances consideration is given to the possibility that, due to circumstances, there is a possibility that a "minor" incident, due to complications may escalate into a "serious" or even "disasterous" injury.

The Risk level score calculation is shown included in column 3 of the Risk Asessment.

RISK SCORE CALCULATIONS

The risk score is a factored in the following order:

Consequence (1 to 6)	Probablility (1 to 6)	Exposure (1 to 6)
1 being lowest consequence	1 being lowest probability	1 being lowest exposure

Below is an example of the method used to calculate the risk scores with the aid of the Matrices.

Sample: Risk Assessment table excerpt.

Hazard	Risk	Score	Control Recommendation	Action Taken Yes / No	Re-Score
Rotating blade in reach of operator at normal work station of shift.	Severing injury risks **RISK SCORE: 6:5:4**	V			

• **Consequence**	• **Probability**	• **Exposure**	• **Code**
Very Serious **4** • **(Permanent disability, loss to $1,000,000)**	**Quite Possible** **5** **Quite possible**	**Frequent** **5** **Frequent**	**V**

The risk score calculation shall be indicated as follows 4:5:5= V

Code	Risk Level	Suggested action
V	**Very High**	**Immediate cessation of work, isolation of area and corrective action required**
H	**High**	**Immediate corrective action required**
S	**Substantial**	**Should receive attention within specified time**
M	**Moderate**	**Should be dealt with within specified time but not an emergency**
L	**Low**	**Risk is acceptable**

CONTROL RECOMMENDATIONS

The Plant auditors pool from their experience in the particular field to offer the most practical cost effective and readily available Risk controls available to be introduced for each item.

CONTROL STANDARD

Controls are recommended based on minimum standards established in Regulations, Codes and Australian Standards where applicable.

RE-SCORE

The Re-Score column provides an indication of the anticipated extent of the proposed Risk management. This figure is only indicative and can only be ascertained once the actual control is introduced and evaluated and reviewed by a subsequent Risk Assessment.

TERMS OF REFERENCE

The Risk Assessment shall be conducted by a competent assessor; the assessor shall take into account :

- The actual use of the plant
- Constructive comments and input from operators
- Appointed employee OHS representative group
- State of Knowledge of the type of Plant
- Applicable Australian Standards.

FOLLOW UP

This report has been prepared in an easy to use format. The “Action Taken” column should be completed as each item is addressed. The person responsible should initial the “Ref” column.

All risk controls introduced as a result of this report need to be reviewed for quality and performance depending upon the severity of the risk control. A review schedule must be introduced that will enable management and the responsible people to evaluate the performance and the quality of the controls. They also need to be able to determine if any further risks have been created as a result of the introduced control.

HAZARD RISK ASSESSMENT Make: Brobo 200 / 250mm HD OHS Series bench grinder

Manufacturers' Serial Number. Group B29600 to B99999

HAZARD	RISK	SCORE	CONTROL	ACTION TAKEN Y / N	RE- SCORE
415/ 240 Volt Main power supply	Inability to isolate power supply during cleaning or maintenance, injury risk, electric shock, electrocution risk to operator or repair personnel. Failure of circuit protection to activate in the event of metallic frames becoming live. RISK SCORE: 5:4:4	V	Introduce "Plug lockout calliper system" to isolation and "lockout" / "tagout" procedure to site maintenance procedures. Attach site maintenance procedures to site safety induction policy & induction for maintenance personnel. Include item to "Test & Tag" AS / NZS 3760 periodic test register. Carry out insulation leakage tests to all hazardous voltage, mains power electric components and associated metal work. Check earth continuity / resistance to all metal frames and attachments. Provide or repair earth points as necessary in accordance with AS 3000 & AS/NZ 3760	Yes See 2.1.5	5:2:3=M
415/240 Volt power supply.	Electric shocks, burns, electrocution risks. RISK SCORE: 6:5:4	V	Fit "DANGEROUS VOLTAGE," and or ISO international symbol signs to all access covers over dangerous voltage areas of unit. Adequate warning of dangerous voltages within must be provided at all areas.	Yes See parts list	6:1:2=L
Emergency stop system.	In ability of operator to shut down plant in the event of an emergency. Non compliance with Plant regulations and AS 4024. Striking, crushing injury risks. Electric shock risks, electrocutions risks. RISK SCORE: 5:4:4	V	Fit red coloured lock down type mushroom head emergency stop button with identification and operating instruction signs, "PUSH TO STOP" located in the immediate proximity to normal operator work stations. (Operator must be able to activate emergency stop from all control stations and normal work positions. Emergency stop equipment circuitry must be "fail safe" & comply with AS 1543, AS 4024 & AS 3000. The wiring of the emergency stop system must comply with AS 4024.1 Section 6.3.7.1 Alternatively fit foot operated / kick type emergency stop system, and fit identification and function sign.	Yes See parts list	5:1:3=L

HAZARD	RISK	SCORE	CONTROL	ACTION TAKEN Y / N	RE-SCORE
Operation controls.	Accidental operation, incorrect use of plant. Non compliance with Plant regulations and Australian Standards. RISK SCORE: 4:5:5	V	Fit identification, function operating and direction signs to all controls, including function and direction indication ie. "ON / OFF" in accordance with R 306.1 of the Plant regulations. Signs must be permanent and indelible in accordance with AS 1319.	Yes See parts list	4:1:2=L
Unauthorized use of plant.	Cutting injuries, eye injuries, severing risks. RISK SCORE: 4:3:4	M	Fit "ONLY TRAINED EMPLOYEES TO OPERATE THIS ITEM OF PLANT AT ANY TIME" sign visible location.	Yes See Chapter 2	4:3:2=L
Flying chip particles and machine debris.	Eye injuries, eye damage. RISK SCORE: 5:5:3	V	Fit eye protection sign to plant unit base frame in location visible to control station, alternatively include. Mandatory eye protection P.P.E requirements to site induction with appropriate signs at entry points to machine shop. Signage must be in accordance with AS 1319 sign No. 421 with supplementary text indicating type of eye protection, ie. Face shield or goggles.	Yes See parts list	5:1:3=L
Operating noise levels.	Hearing loss due to noise exposure. RISK SCORE: 4:5:5	V	Fit "HEARING PROTECTION MUST BE WORN" sign in proximity to plant. Fit sign in accordance with AS 1319, sign No 425.	Yes See parts list	4:2:3=L
Exposed spindle and nut.	Entanglement, hand injuries RISK SCORE: 4:4:4	H	Fit enclosed type fixed guarding over spindle ends in accordance with AS 4024.	Yes See parts list	4:1:2=L
Work rests.	Hand injuries, flying objects risk, entanglement risk, jamming of fingers and material into grinding wheel. RISK SCORE: 5:3:5	H	Adjust work rest to horizontal plane at centre point of grinding stone axis. Provide maximum 3 mm clearance between grinding stone and rest. Introduce periodic safety inspections and rest adjustment regime with register to include all service and faults history. Schedule should include check of controls switch, safety guarding as well as serviceability and adjustments.	Yes See Chapter 3.2.1 & Appendix 1	5:2:3=M

HAZARD	RISK	SCORE	CONTROL	ACTION TAKEN Y / N	RE-SCORE
Cleaning.	Crushing, striking injuries to operators, maintenance and cleaning personnel. RISK SCORE: 6:3:5	V	Fit "DANGER HIGH VOLTAGES, QUALIFIED SERVICE PERSONNEL ONLY, SWITCH OFF AND ISOLATE PLANT AT ALL TIMES PRIOR TO CARRYING OUT ADJUSTMENTS OR CLEANING", signs in proximity to controls	No See Manual 5.2	6:2:3=S
Replacement of grinding stone and dressing of worn stone.	Entanglement, striking, crushing injuries risks. RISK SCORE: 5:4:4	V	Carry out "Job Safety Audit" on procedure, write "Safe Work Procedure" accordingly, display S.W.P. in proximity to machine.. Provide servicing instruction documentation.	Yes See 3.2.3	5:2:2=L
Not Fixed to Bench top	Grinder drops/slides during use. Operator injuries, plant damage. RISK SCORE: 3:4:4	S	Securely fasten base of grinder to the bench top with dyna-bolts or similar.	Yes See 1.4	3:1:1=L
Plant maintenance.	Unauthorized and untrained personnel carrying out plant maintenance, personnel injuries. RISK SCORE: 5:4:4	V	Introduce "No unauthorized personnel to carry out maintenance to plant" policy to site induction training.	Yes See 3.2	5:4:3=H
Airborne contaminants, dust.	Ingress of hazardous materials into lungs, respiratory illness, lung disease. RISK SCORE: 5:3:5	V	Fit "Respirator must be worn", P.P.E. signs in accordance with AS 1319 sign number 423.	No Ferrous metals only	5:2:2=L
Safety systems.	Severing, crushing injury risks. RISK SCORE: 5:3:5	H	Create plant log book for each item of plant. Introduce periodic safety inspection system of all electrical, mechanical safety systems, including main power isolator, limit switches, guards, wiring and emergency stop buttons. Record all results in plant log book on a scheduled interval.	Yes See Appendix 2	

phone : 03 9646 0460
fax : 03 9646 0460
email : info@avgoservices.com
web : www.avgoservices.com
P.O. Box 5089, Port Melbourne, Victoria 3207

avgo services

Certificate of AS 4024 & AS 3000 compliance

This is to certify

That an AS 4360 Risk Assessment has been completed on the

Brobo 200/250HD OHS SERIES BENCH GRINDER Serial No. *B29600 ~ (*Subject to limitations)

Risk Control recommendations have been implemented accordingly.

The Plant system satisfies necessary requirements of the Occupational Health and Safety Act 2004

BROBO GROUP®
A LIFETIME OF RELIABILITY

Signed

Theo Avgoulis
Plant Inspector (ASIA)

Dated: 01 May 2009

***Certification is applicable only to current product specifications.