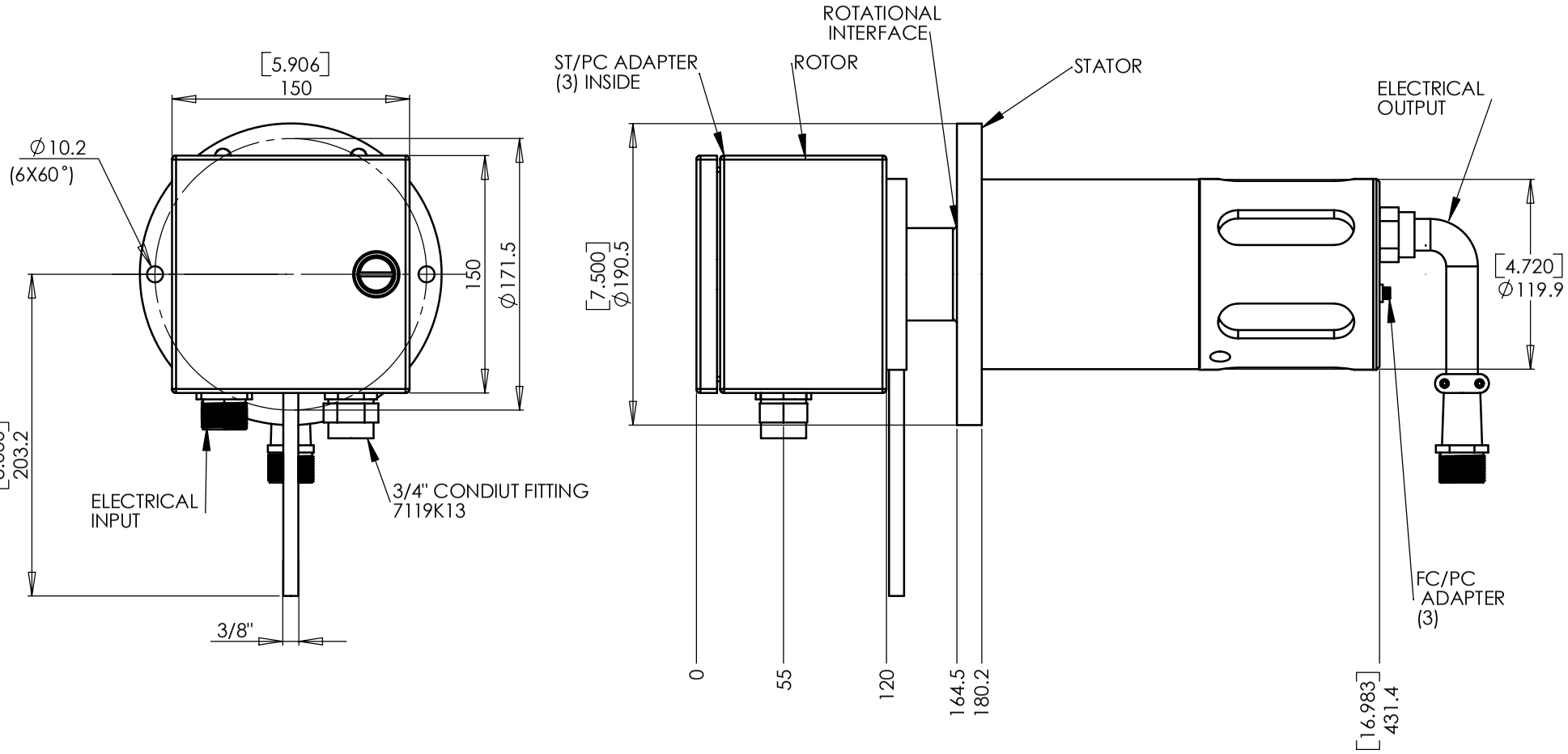

UNLESS OTHERWISE SPECIFIED:

DIMENSIONS ARE IN mm

TOLERANCES:
ANGULAR: ± 1/2°
ONE PLACE DECIMAL ± 0.100
TWO PLACE DECIMAL ± 0.050
THREE PLACE DECIMAL ± 0.025

MATERIAL:

	DATE	NAME
DRAWN	10.24.06	R. Z.
CHECKED		B. Z.
ENG APPR.		
MFG APPR.		
Q.A.		

COMMENTS:

PRINCETEL, INC.

TITLE: EO SLIPRING

SIZE B | DWG. NO. 1800-00-00 | REV 2.9

PART NO. SR721 | SHEET 1 OF 1

PROPRIETARY AND CONFIDENTIAL

THE INFORMATION CONTAINED IN THIS DRAWING IS THE SOLE PROPERTY OF PRINCETEL, INC. ANY REPRODUCTION IN PART OR AS A WHOLE WITHOUT THE WRITTEN PERMISSION OF PRINCETEL, INC. IS PROHIBITED.