TENTE

BETTER MOBILITY. BETTER LIFE.

# PRODUCTIVITY

## The optimal solution for automatic guided vehicles.

Scout with Maxtech conductive wheels

# ADVANTAGES

## Scout

- **Reduced accident risk:**
  Slim design to avoid collisions in narrow passages.
- **Automatic alignment:**
  When lifted up, the castor is automatically aligned in the direction of travel.
- **Certified conductivity:**
  Conductive version to protect users and electrical devices from electrostatic discharge.
- **Permanent washability:**
  All metal components are made of stainless steel.



# TECHNOLOGY

## Scout

- **Easy swivelling**
  Precision ball bearings for excellent swivelling properties under heavy loading.
- **Constant conductivity:**
  The large rounded conductivity tracks from the tread to the ball bearing ensure that the wheel remains permanently conductive – even when loaded.
- **Quick servicing:**
  Swivel bearing lubricated with long-life grease and fitted with lubrication funnel for easy maintenance.

# IN USE

# Scout

**Intelligent material flow:**

In environments with automatic guided vehicles, the Scout optimises dynamic logistics processes and the ergonomic requirements associated with moving the goods containers.

## The result:

**Just-in-sequence supply of components and goods baskets to assembly lines**

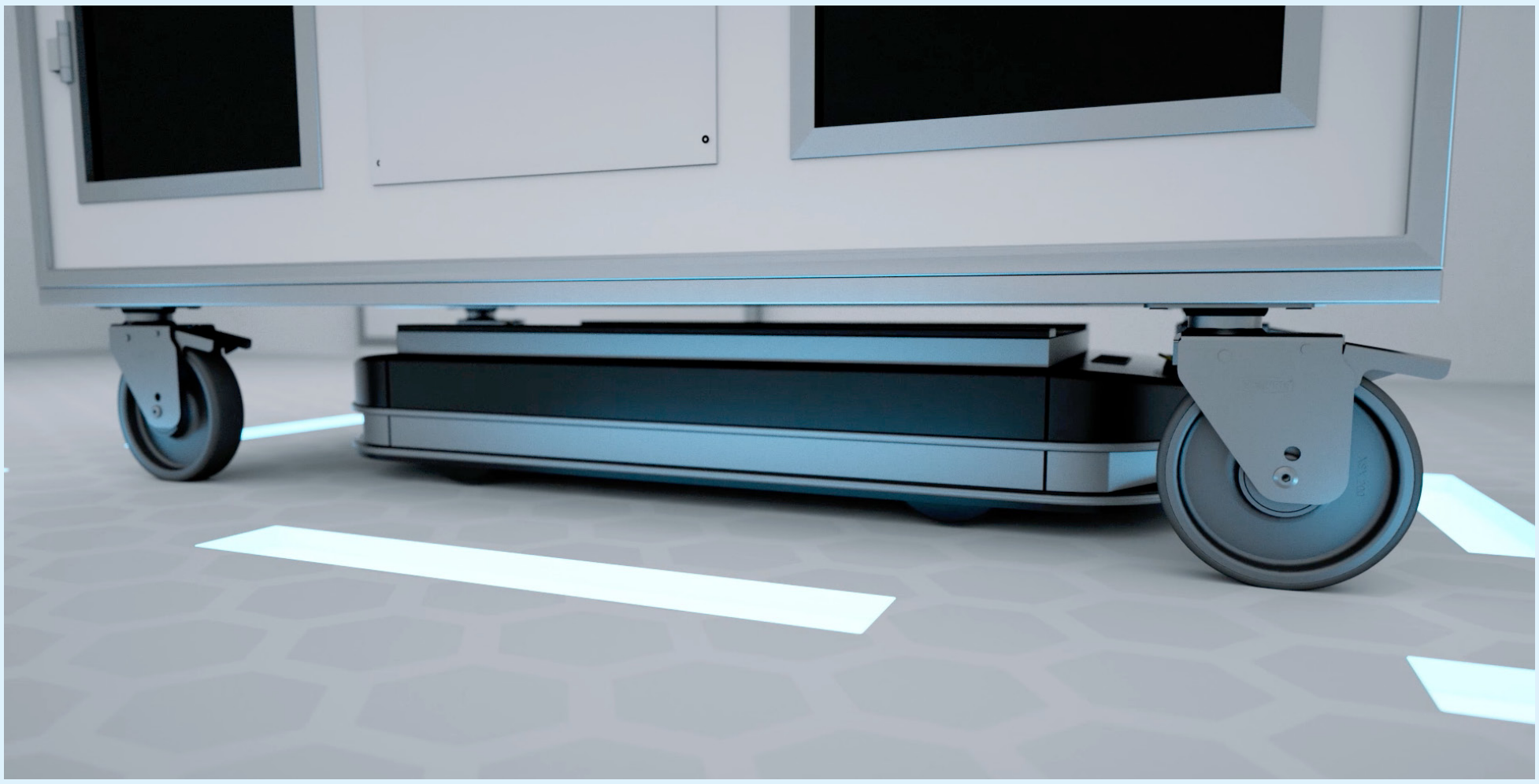

# PRODUCT FAMILY

# Scout

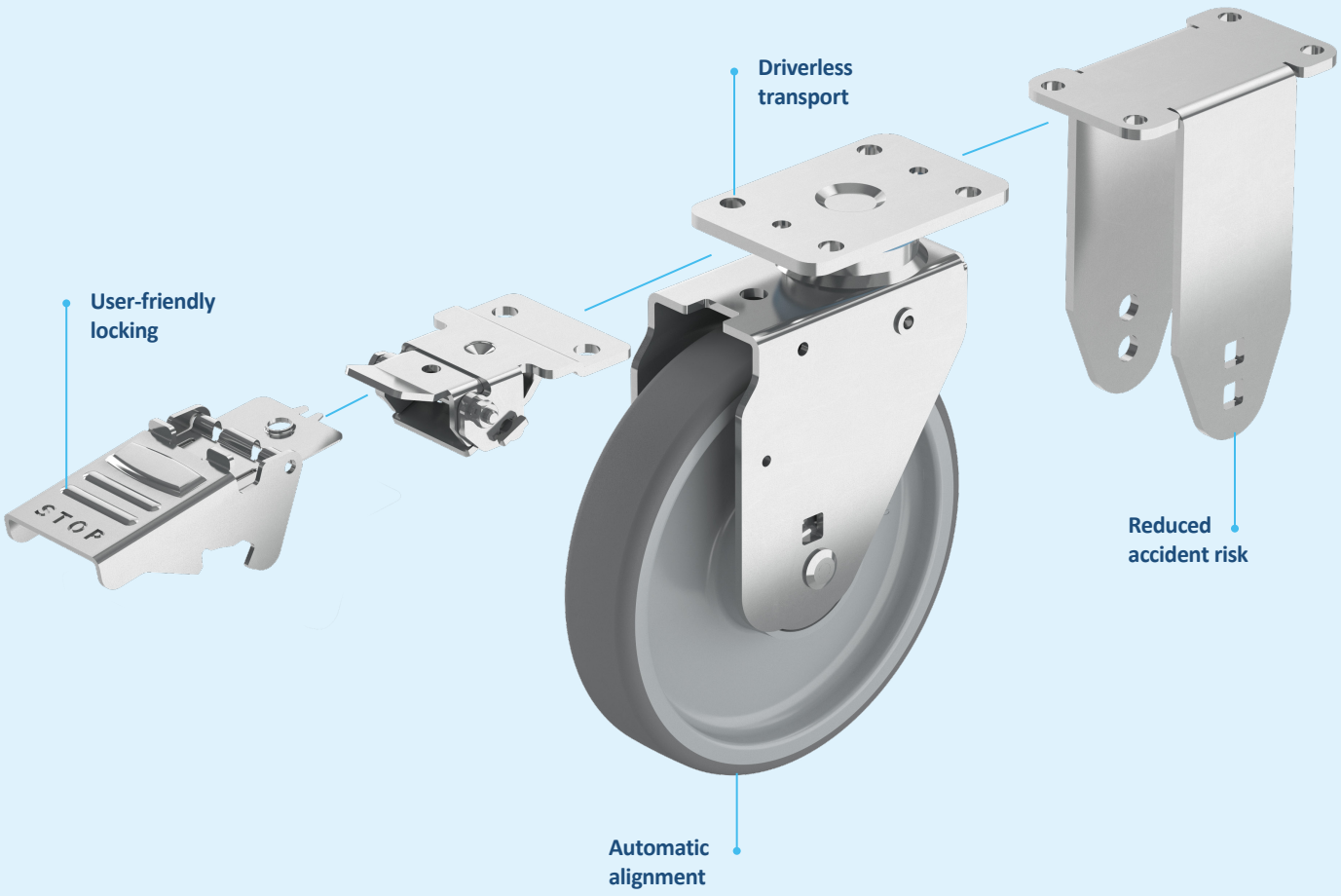


## WHEEL MATERIALS

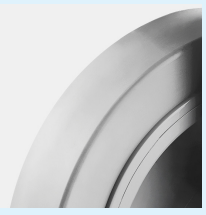

**ELASTECH**
Elastic rubber

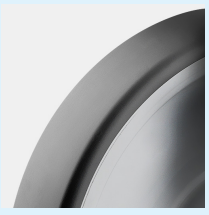

**MAXTECH**
Polyurethane, injection-moulded

ADVANTAGES TECHNOLOGY IN USE ES BACK TO TOP

# SPECIFICATIONS

Scout

| | |
|---|---|
| Overall height | 205 to 245 mm |
| Offset | 50 to 54 mm |
| Suitable for wheel sizes | Ø 160 to 200 mm |
| Load capacity | to 350 kg at 4 km/h (EN 12532) |
| Wheel name | Maxtech conductive |
| Wheel centre | Polyamide |
| Tread | Polyurethane thermo-plastic, electric conductive |
| Bearing | Precision ball bearing, stainless steel |
| Temperature | -40 to +80°C (short term up to 100° C) |

Also available as a smart version with reduced material thickness for lower capacities.

ES BACK TO TOP