Pütise

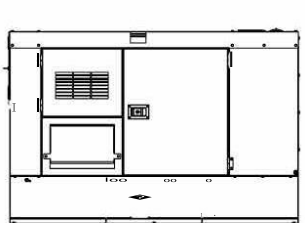

Generator set

Sound-proof type

DT30P5S-AU

SPECIFICATIONS

DTP-AU series
DT30P5S-AU

50 Hz @ 1500rpm,3-phase/5-wiring

1 Standards & Conditions

Design Standards

The designs and the productions are in conformity with:

- Conformite Europeenne (CE)
- ISO8528-5:2005
- AS 3000-2018
- AS 3010-2017

Environmental Operating Conditions

- Installation place: Outdoors or indoors (well ventilated).
- Ambient temperature: -25℃ to 50℃.The coolant heater is needed when the temperature is below 5℃
- Humidity: Less than 90%.
- Altitude: Below one thousand (1000) meters above sea level.

Factory Inspection

- Inspection items.
- Protection devices working test.
- Starting ability in normal temperature.
- 50% rated power load moment capability.
- Voltage deviation and speed variation: 0%, 25%, 50%, 75%, 100%, 110% Load.

Painting Process

- Painting process specifications and colors are based on the manufacturer's standard.
- The customer could also choose the color which the manufacturer offers.

2 General Features

- PowerLink engine 4D3.2G1
- Close coupled to PowerLink alternator PL1G
- Microprocessor control module PLC-920
- Main circuit breaker: 50A
- Rotate speed governor: Mechanical governor
- Excitation system: Self excited,SHUNT
- A.V.R model: SX440
- Key switch
- Emergency stop switch
- ATS(automatic transfer switch)receptacle
- Remote run connector
- 1x12V/60AH sealed for life maintenance free battery
- Lockable battery isolator switch
- Powder coated canopy
- 50℃ radiator
- Steel base frame
- Vibration isolators between the engine/alternator and base frame
- Dry type air filter
- Base fuel tank for 29 hours running
- Drain points for fuel tank
- Operation Manual / Specifications

3 Equipment

General technical data

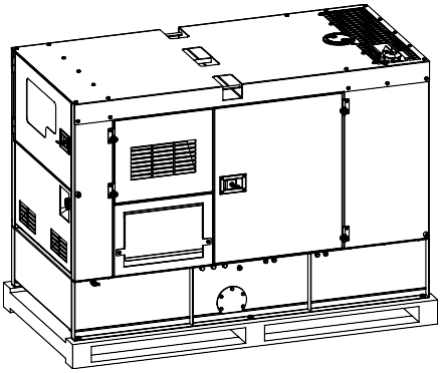

Model. DT30P5S-AU

Tank capacity. 140L

Dry weight.....955kg

Sound pressure level @ 7m..... 68.0dBA

Dimensions L×W×H. 1850x848x1190mm

Standby Power.....33kVA/26.4kW

Prime Power.....30kVA/24kW

Voltage	380V		400V		415V
Ampere	45.6A		43.3A		41.7A
Genset Fuel Consumption					
Frequency/Load	25%	50%	75%	100%	110%
50Hz (L/h)	2.8	4.0	5.6	7.6	9.3

3RZHU 6\VWHP

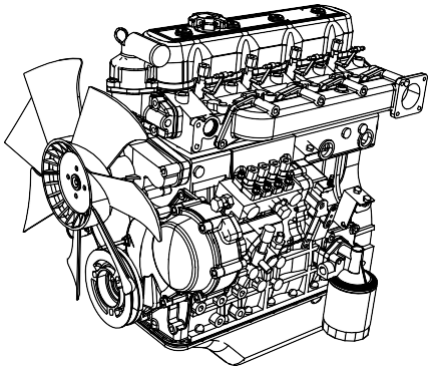

Engine Manufacturer/Brand ..... Powerlink
Engine Model..... 4D3.2G1
Dimensions L×W×H. 750x600x765mm
Dry Weigh (approx.) 265Kg
Number of Cylinders..... 4
Bore..... 98mm
Stroke..... 105mm
Displacement. 3.2L
Compression Ratio..... 18.5
Type of injection..... Direct injection
Intake System ..... Natural aspirated
Intake Resistance ..... ≦5kPa
Cooling System..... Water cooled
Fan ..... Pusher
Battery Voltage..... V
Type of Fuel..... No.2 or ASTM D975
Type of Oil ..... API CF/SE or CCMCF4
Oil Capacity 6.5L
Type of Coolant..... Glycol mixture
Coolant Capacity 5.0L
Back Pressure ..... ≦10.1kPa
Standby Power..... 34kW
Prime Power..... 31kW

Alternator

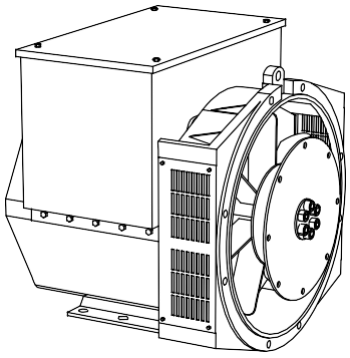

Alternator Manufacturer/Brand..... PowerLink
Alternator Model..... PL1G
Exciter ..... Brushless
Cooling Fan ..... Cast alloy aluminum
Windings ..... 100% copper
Insulation Class..... H
Winding Pitch 2/3
Terminals..... 12
Drip Proof..... P23
Altitude ..... ≤1000m
Overspeed..... 2250rpm
Air Flow..... N/A
Voltage Regulation ..... ±1.0%
Total Harmonic TGH / THCat no load < 1.5 % - on load < 5%
Telephone Interference..... THF<2%;TIF<50

PLC-920 Control System

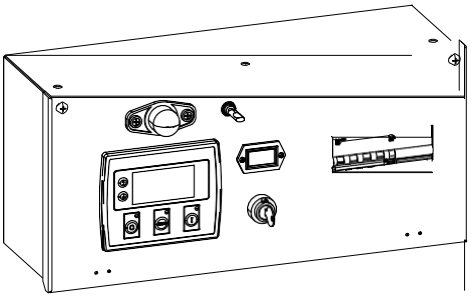

PLC-920 is an advanced control module based on microprocessor designed to control the engine via push buttons on the front panel. The module is used to start and stop the engine and indicate fault conditions, automatically shutting down the engine and giving a true first up fault condition of an engine failure.

Standard Control Function

- Manual Engine Control Module
- Low Oil Pressure
- High Engine Temperature
- Auxiliary Shutdown
- Overspeed Protection
- Protection hold-off timer
- Charge Failure warning

4 Overall Dimensions

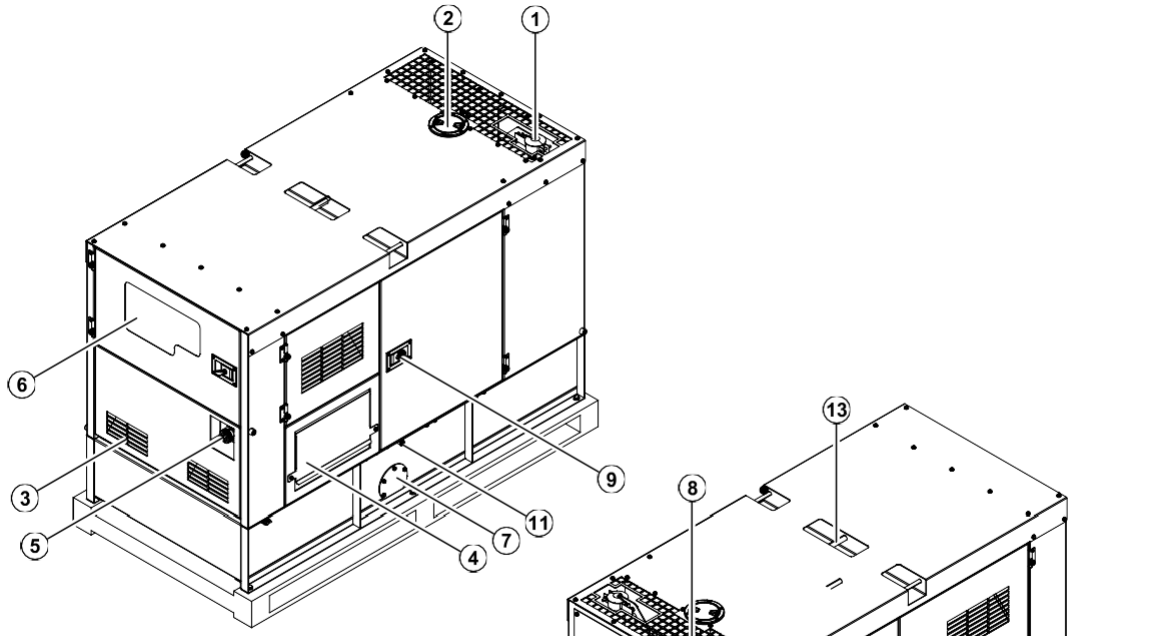

⑦ Fuel drain
⑥ Control cabinet
⑤ Emergency stop switch
④ Cable trench
③ Air inlet
② Coolant inlet
① Exhaust gas outlet
⑭ Base frame
⑬ Lifting lug
⑫ Wooden tray
⑪ Oil drain hose fitting
⑩ Coolant drain hose fitting
⑨ Access door
⑧ Air outlet

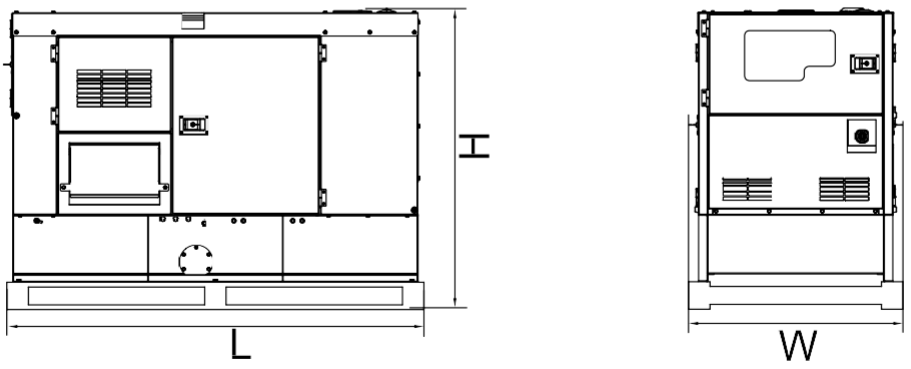

5 Control System

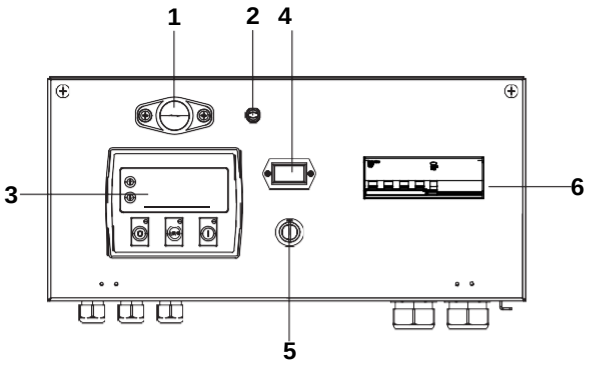

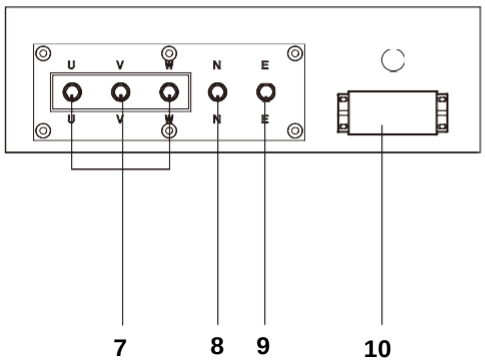

Control & field wiring cabinet

Ref.	Description
1	Control cabinet lamp
2	Control cabinet lamp switch
3	Control module
4	Time counter
5	Key switch
6	Main circuit breaker
7	Live wire terminals
8	Neutral wire terminal
9	Ground wire terminal
10	Mains input/remote communication connector

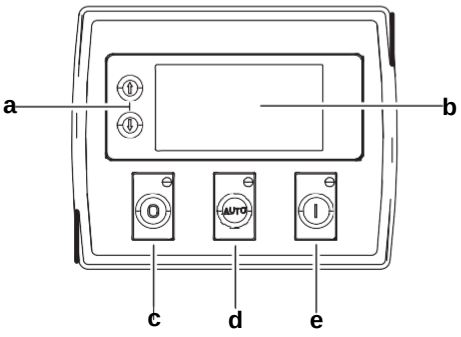

Control module

Ref.	Description
a	Navigation button£» Accept (Configuration mode only)
b	Main status display
c	Stop/reset button£» Next page (Configuration mode only)
d	Auto start button£» Decrease value/next item (Configuration mode only)
e	Start button£» Increase value/next item (Configuration mode only)

1000033898-A2-E
10.2020