TENTE

BETTER MOBILITY. BETTER LIFE.

DESIGN

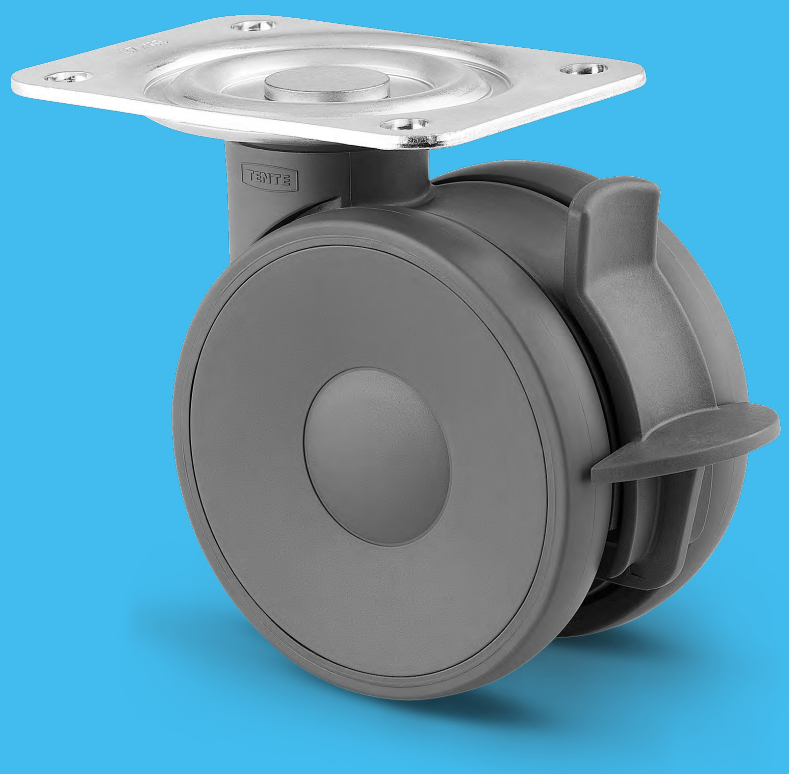

Ergonomic design for industry

Linea

ADVANTAGES | TECHNOLOGY | IN USE | PRODUCT FAMILY | SPECIFICATIONS

ADVANTAGES

Linea

- **Optimised manoeuvrability:**
  Twin wheel castor with excellent manoeuvrability due to differential action.
- **Ergonomic pedal:**
  “Kick-pedal” kickstops for quick and easy operation with any kind of footwear.
- **Individual branding:**
  Can be printed with a logo. On request, customers can also apply different prints themselves. Colours can be adapted to match the product design.

Deutscher Designer Club

interzum award

reddot design award

TECHNOLOGY

Linea

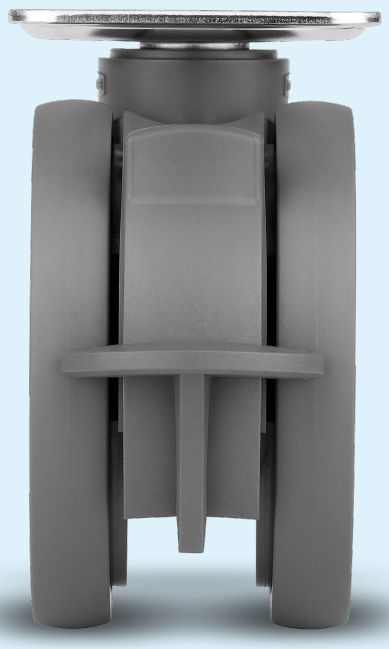

- **Shock-absorbing properties:**
  Absorbs shocks on uneven floors.
- **Secure stance:**
  Extreme torsional rigidity ensures a secure stance for applications up to 450 kg.
- **Chemical-resistant components:**
  Insensitive to many cleaning agents and chemical substances.

IN USE

Linea

For a mobile manufacturing environment:

Easy shunting and manoeuvring
for material supply systems.

The result:

Smooth running work processes

PRODUCT FAMILY

Linea

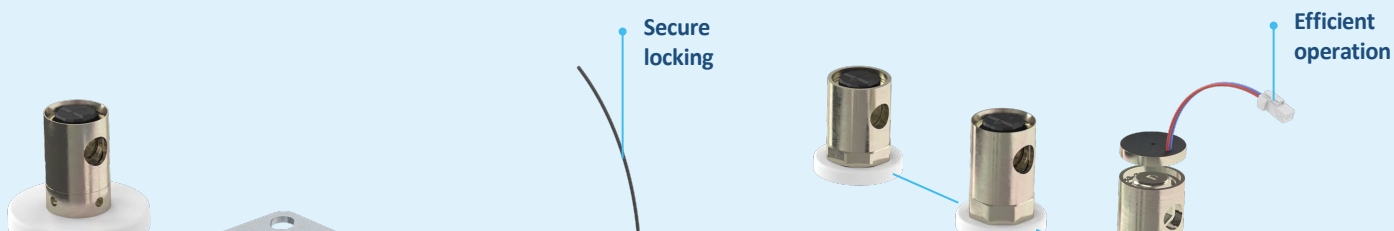

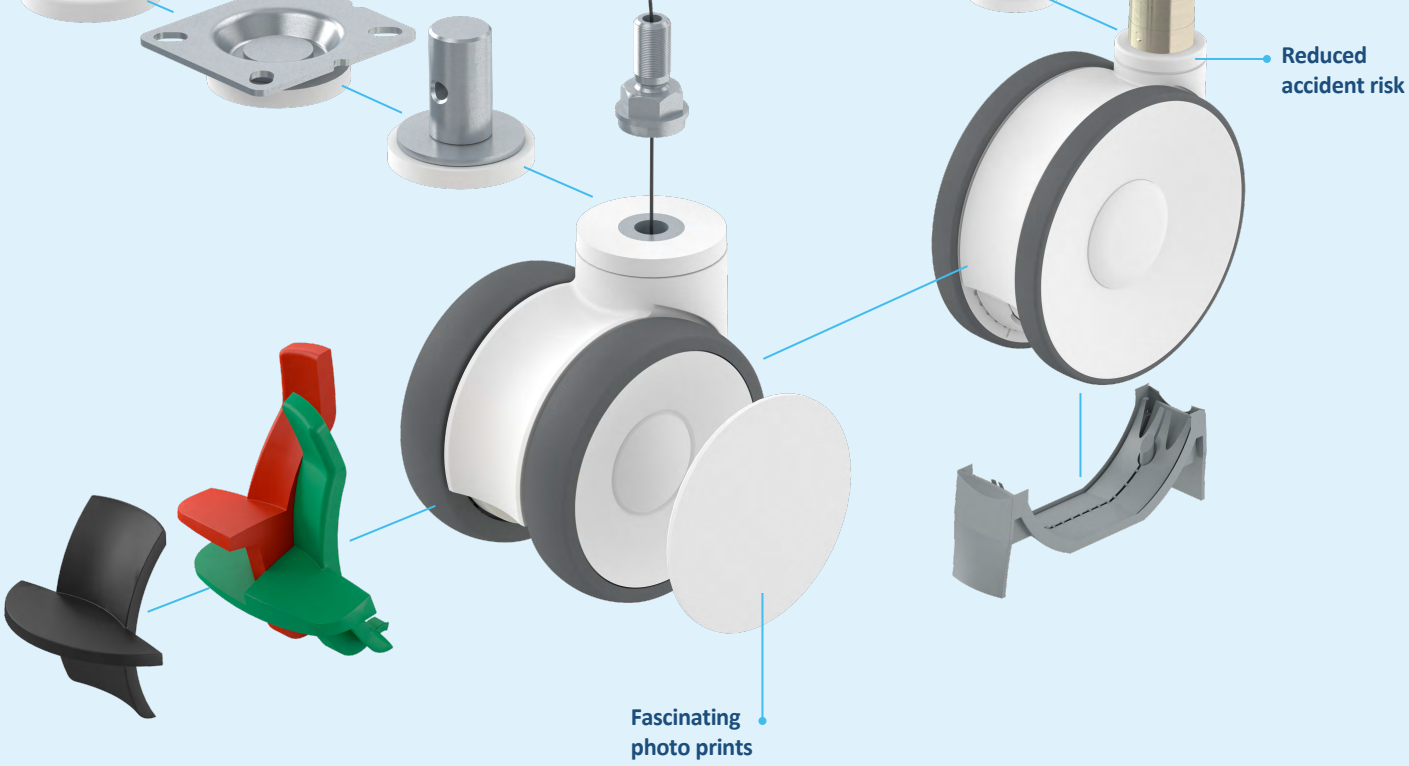

WHEEL MATERIALS

SUPRATECH
Thermoplastic rubber

DURATECH
Polyamide

MAXTECH
Polyurethane, injection-moulded

SPECIFICATIONS

Linea

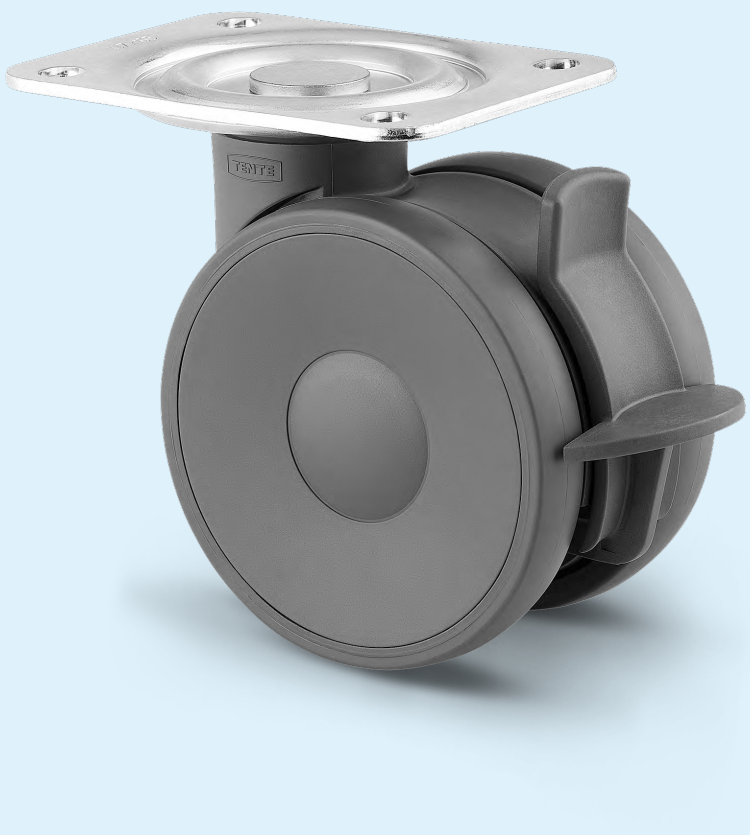

Overall height	177 mm
Offset	52 mm
Wheel size	Ø 150 mm
Load capacity	150 kg – dynamic load capacity according to DIN12530
Wheel name	Maxtech
Wheel centre	Polyamide
Tread	Polyurethane
Bearing	Precision ball bearing
Temperature	-40 to +80°C