kemutec
schenck process group

Powder Processing Equipment & Systems

>> Sifting
>> Milling & Grinding
>> Mixing & Blending
>> Screening

Schenck Process Group

Your Partner Worldwide

Kemutec is part of the Schenck Process Group, a worldwide manufacturer of bulk material handling products and systems. The Kemutec brand specializes in the supply of custom engineered process solutions for powders used in the food, chemical, pharmaceutical and environmental industries.

Applications for those industries include:

Food
» Flour sifting
» Sugar grinding
» Dairy powder de-agglomeration
» Cocoa mixing
» Cookie rework

Pharmaceutical
» Dry & wet granulation
» Tablet reclaim & rework
» Dry ingredient & blending
» Ingredient check sifting

Chemical
» Clay & mineral screening
» Metal powder blending
» Classifying of EPS (Expanded Polystyrene Beads)
» Classifying of SAP (Super Absorbant Polymers)

Environmental
» Sorbent grinding
» Frac sand screening
» Recycling of glass beads
» Reclaiming of gypsum board

The Schenck Process Group delivers….

- Truck or railcar loading, unloading and bulk storage systems
- In-plant transfer for major, minor and micro ingredients
- Minor and micro ingredient scaling systems
- Low pressure continuous dense and dilute phase handling systems
- Plant controls systems
- Dust collection
- Sifting, storage and mixer transfer systems
- Ingredient unloading, cleaning and storage systems
- Liquid storage, scaling and transfer systems
- Precise milling of bulk solids
- Dry ingredient convey systems
- Trim and reclaim transfer systems
- Batch and continuous feeding systems

Project management

As a member of the Schenck Process group, everything we do is centered on customer satisfaction. We strive to make your equipment and systems robust and efficient. Our project management teams become an extension of your business with a direct line of communication to the many resources within the Schenck Process global network. Your team will take command of the design/build process from the project kick-off all the way to process commissioning. From start to finish, our teams are dedicated to meeting your business goals.

Process Controls

Our Process Controls Group has been entrusted to control processes for some of the world's most recognizable brands. We've been building customized controls for over 40 years and our engineers have an intimate knowledge of industrial processing and production. Our in-depth experience provides field proven solutions.

We can custom design whole-plant or partial systems for new plants or integrate legacy control systems. We make everything from small independent panels to complex multi-processor and distributed I/O control systems. Interface with warehouse management, MES and ERP software systems provide a seamless transfer of data throughout a facility. The Process Controls Group forges long term relationships with customers to support large control system implementations, typically utilizing remote access tools allowing rapid resolution of issues or minor operational adjustments.

From analysis and planning, through equipment and control panel design, to testing and long-term service, our customers work with a single point of contact throughout the project.

Features and Benefits:

» Cantilever shaft

» 30-second screen change

» No oversized end bearings or seals

» Hinged oversized end door

» Easy access for cleaning and maintenance

» Hygienic design

Kek Centrifugal Sifters

The Kek Centrifugal Sifter is recognized as the leading industry high capacity sifter, providing unparalleled performance and user benefits to customers who expect the best.

Fitted with a standard cantilever shaft, the Kek Centrifugal Sifter delivers not only the best standards of hygiene and cleanliness, but also unsurpassed reliability with minimal maintenance requirements.

High Efficiency Sifting

Principle Processes:

» Policing – removal of extraneous material
» Scalping – small percentage removal of oversize product
» Classification – separation by size
» De-dusting – removal of fines
» Conditioning – provides uniform density for easy flow
» De-agglomeration – breaking of soft lumps and agglomerates
» Liquid Straining – Removal of excess liquid from solid products

Typical Optional Design Features:

» Drive arrangement
» Hazardous area electrics
» Pressure rated design
» Gas inerting
» CIP capability
» Special metals and alloys for construction
» High containment machines
» Screen protection or trash traps
» Dust-tight connections

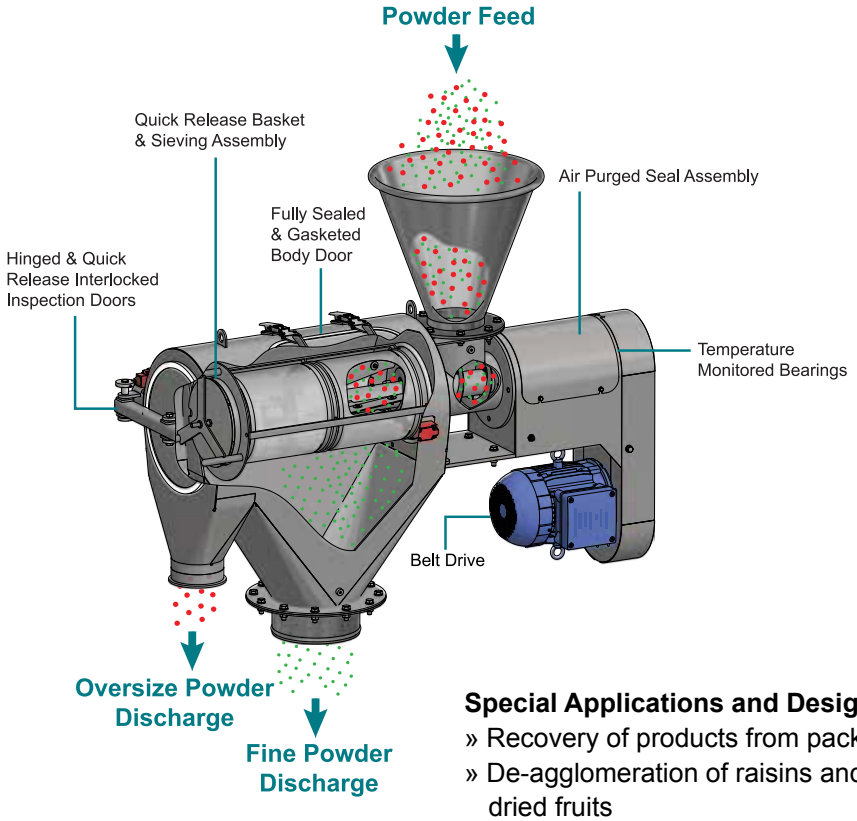

Range Information:

» Available in 7 sizes
» From a few lbs/hr to over 100 tph
» Available with nylon, stainless steel woven wire and wedge wire screens
» Inline pneumatic conveying models

Special Applications and Designs

» Recovery of products from packaging
» De-agglomeration of raisins and other dried fruits
» In-line vacuum conveying centrifugal sifters
» In-line positive pressure pneumatic conveying centrifugal sifters
» Powder paint spray booth recovery
» Flour sieving using Kek Centrifugal Sifters
» Kek 'Insertable' Mini Sifter
» Extruder protection

Kek K800CP In-Line Pneumatic Conveying Sifter

Kek K650CP In-Line Pressure Sifter with Bolted Side Door

Kek K650CP Pressure Sifter Showing Heavy Duty Hinged Door Clamps

Kek K1350 Sifter for High Capacity Continuous Processing

Kek K300C Sifter with Integral Control Panel

Kek K300C Sifter for Lower Capacity Applications

Applications:
» Dry granulation
» Wet granulation
» Tablet rework and regrind
» Lump breaking

Milling

To meet the needs of the powder processing industry, Kemutec offers a wide range of milling technologies including standard particle size reduction machines and customized solutions to suit a wide range of applications.

Key Features:
» High Efficiency – Virtually all the energy input is utilized in the size reduction process.
» Gentle Grinding Action – Allows uniform size distribution, resulting in minimal fines generation.
» Low Heat Generation – Essential when milling fatty, sticky or heat sensitive products.
» Low Dust Levels – No need for air filtration. Keeps installation costs to a minimum.
» Low Noise – No costly acoustic protection. Mobile units can be used in any location.
» Flexibility – Freestanding mobile units, standard models as part of process systems and special custom units as an integral part of other equipment and systems.
» Low Profile Design – Compact design results in low height and low-profile installation.

Kek Kibblers

Strong and robust, the Kek Kibbler is designed to grind large lumps of up to 6” (150 mm) and reduce them to 1/8” (2-3 mm) in preparation for further processing. The Kek Kibbler pre-breaker mills are designed to work in conjunction with other Kek mills or as stand-alone mills. Size reduction takes place through a combination of impact, crushing, cutting and abrasion as the slow speed, heavy-duty beater sweeps product against the contoured grinding screen. Available with cantilever shaft grinding beaters, the Kibbler is ideal for food, pharmaceutical, and fine chemical applications.

Coarse Grinding and Pre-Breaking

Features and Benefits:

» Heavy duty lump breaker and pre-breaker
» Slow-speed, high torque size reduction
» Cantilever shaft design available
» Easy access for cleaning
» Quick screen changes
» Minimal ‘fines’ generation
» Strong and robust construction
» Minimal heat generation
» Control of milled particle size through screen selection
» Quiet operation

Range Information:

» Available in 4 sizes
» Grinds from approx. 6” to 1/8” (150 mm to 2-3 mm)
» Screens range from 1-1/4” to 1/8” (30 mm to 3 mm)
» Wide range of grinding screen size/type and interchangeable beaters to suit a variety of process requirements

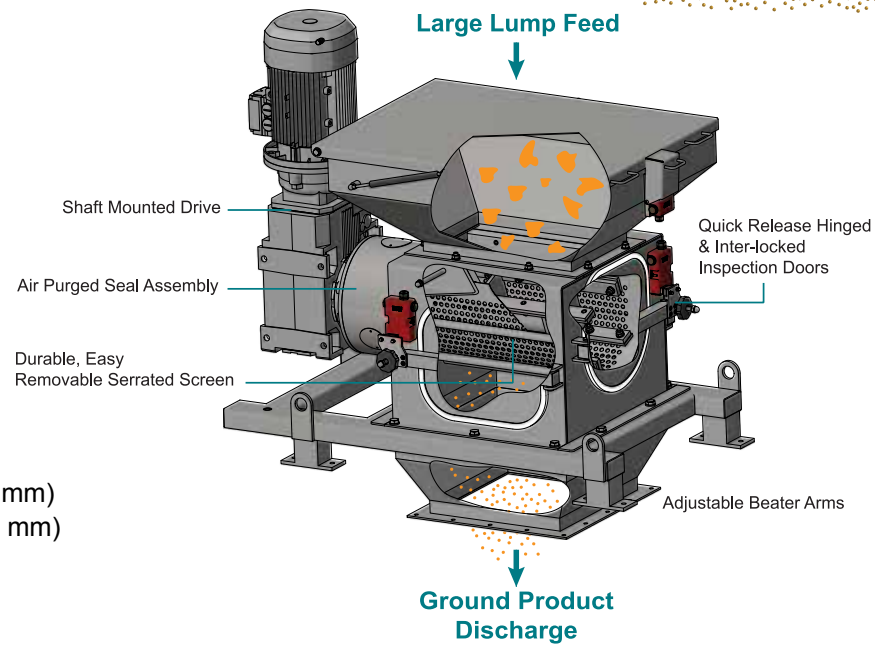

View of Cantilever Shaft and Hinged End Door

M303C Kibbler with Hinged Side and End Doors

Kek Cone Mills

The Kek Cone Mill is recognized as an intermediate energy mill and one of the most versatile size reduction machines in the powder processing industry. Its ability to process a wide range of feed material and produce an equally wide range of product make it ideal for sizing in both wet and dry granulation processes. The Kek Cone Mill provides a gentle, low energy form of size reduction and eliminates traditional milling problems including noise, dust, and heat generation. The gentle grinding action is capable of control within fine limits while maintaining a close particle size distribution with minimal fines generation.

Versatile Intermediate Grinding

Features and Benefits:

» Process Versatility: Through variable speed, cone hole shape and size, and rotor gap
» Patented Rotor Gap Adjustment: No loose spare washers
» High Efficiency: Virtually all energy input is utilized in the size reduction process
» Gentle Grinding Action: Allows uniform size distribution with minimal fines
» Low Heat Generation: Essential when milling fatty, sticky or heat sensitive products
» Low Dust Levels: No need for air filtration, reducing installation costs
» Particle Size Range: D50 from 500µ to < 250µ

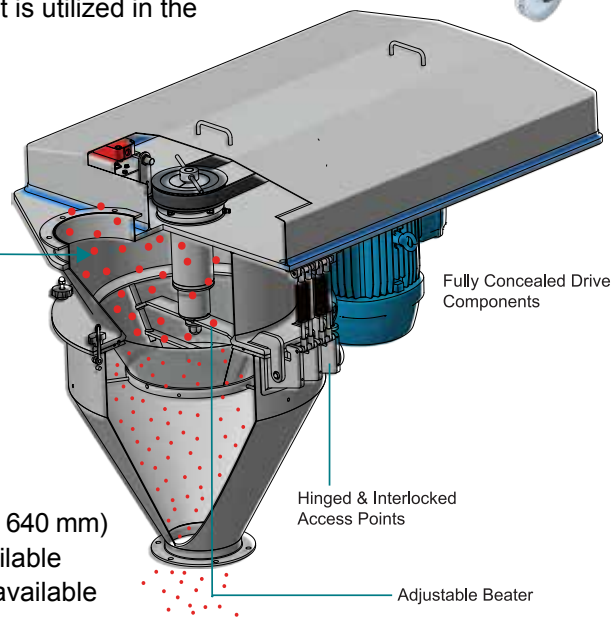

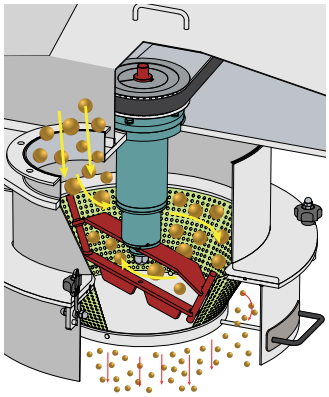

Range Information:

» 7 model sizes
» From 3” to 25” diameter cones (75 mm to 640 mm)
» Underdriven and top driven models available
» Belt, gearbox and direct motor models available

Kek 680 Cone Mill for Delumping

Kek 120 Cone Mill

Kek Universal Mills

The Kek Universal Mill is designed for high-performance fine grinding, versatility and safety. Available with various interchangeable grinding media, this mill offers unsurpassed high energy, one-pass size reduction. It ensures a controlled size reduction with a high degree of fineness, typically grinding with a milled particle size range D50 of 100µ to 20µ. A full range of models are available to suit a variety of processes and throughput requirements. The superior design allows for versatility of integration, easy access, trouble free maintenance and effective cleaning.

High Energy One-Pass Fine Grinding

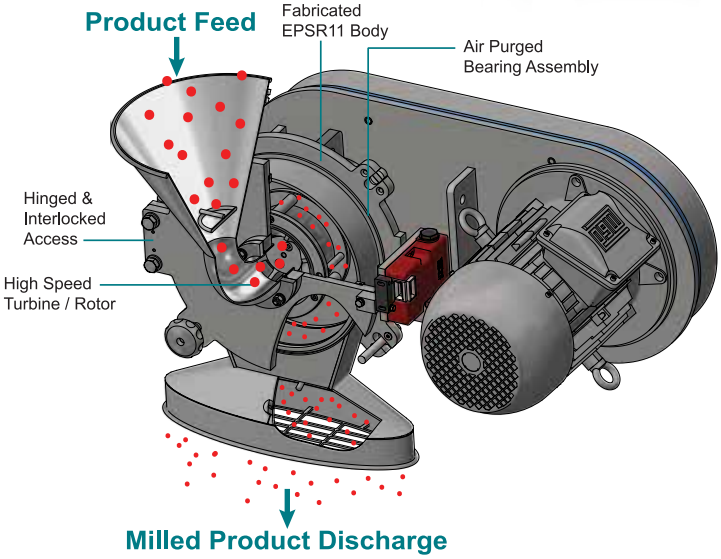

Features and Benefits:

» Interchangeable grinding media for maximum process performance
» High energy for superior fine grinding
» Milled particle size range down to a D50 of 100µ to 20µ
» Can be custom integrated into systems for maximum design flexibility
» Closed-loop “airless” milling for minimal moisture absorption
» Temperature controlled and cryogenic grinding available

Range Information:

» Supplied as machine only or complete milling system
» Large range – from lab to production
» 3 hp to 125 hp
» Grinding media options include turbine and screen, pinned disc, and rib track

Pinned Disc Grinding Media

Turbine and Screen Grinding Media

Kek Closed Loop Sugar Milling System

Pilot Plant Universal Mill

Kek 2H Mill in Carbon Steel

Features and Benefits:

- » High energy controlled grinding
- » Temperature controlled grinding
- » Tight particle size distribution
- » Easy to clean with unique side opening design

PPS Air Classifier Mills

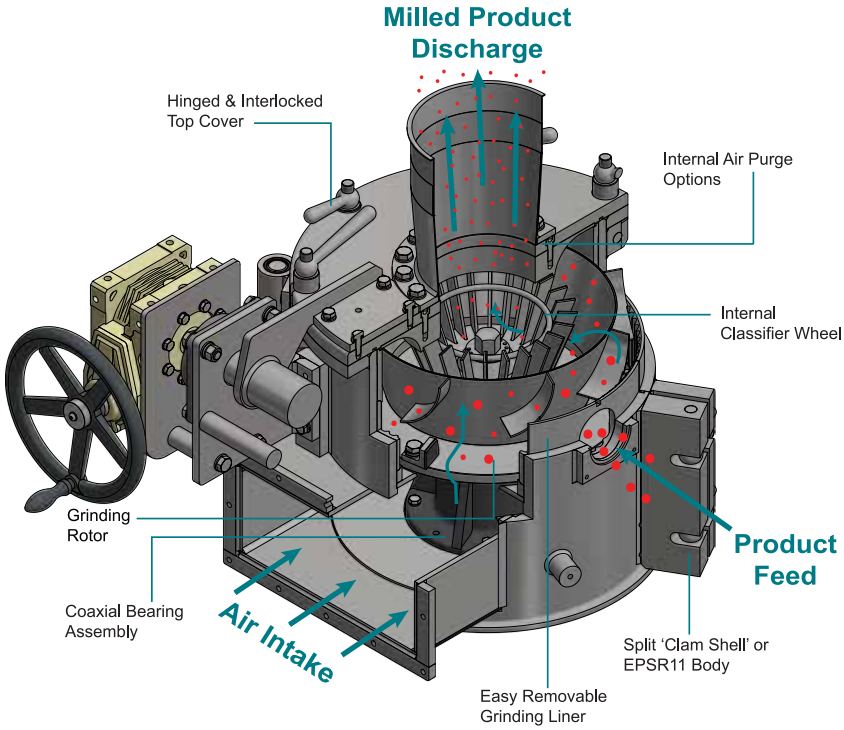

The PPS Air Classifier Mill incorporates an internal air-classifying wheel with an independent drive giving precise control over "particle cut point" selection. Suitable for batch processing or continuous operation. This range of mills serves all industries producing fine powders where control of grinding temperature and particle size distribution are of primary importance.

Range Information:

PPS Air Classifier Mills cover extensive sizes and options:

- » 11 model size range, from lab through large production mills
- » 5 hp to 400 hp main drives
- » Typical milled particle size range down to a D50 of 10μ to 5μ
- » Easy to adjust particle size output
- » Integral classifier for a fine powder

GKM Tumbler & Vibrating Screeners

The GKM Ultimate Tumbler Screening Machine for controlled screening, multi-deck classification and de-dusting of dry, powdered and granular products. Particularly suitable for high feed rates and multi-deck separations of fines, and difficult to screen lightweight products. It features patented manual deck lifters for easy screen changes and high efficiency screening. Its tough modular design allows for long service life of all parts, no dead corners and low noise levels. The screener is 100% statically and dynamically balanced for vibration free installation.

Features and Benefits:

» High efficiency screening and separation
» Three dimensional screening action
» Low frequency vibration results in longer service life
» Gentle action, with little or no product degradation
» Low noise levels
» 100% statically and dynamically balanced
» Patented manual deck lifters for easy screen change
» Ultrasonic anti-blinding system available

Range Information:

» Model size range from 24” to 102” (600 mm to 2600 mm) diameter
» 1-6 screening decks available
» Screens 20 mm to 20µ
» Screens available in stainless steel wire, synthetic fiber mesh and perforated plate

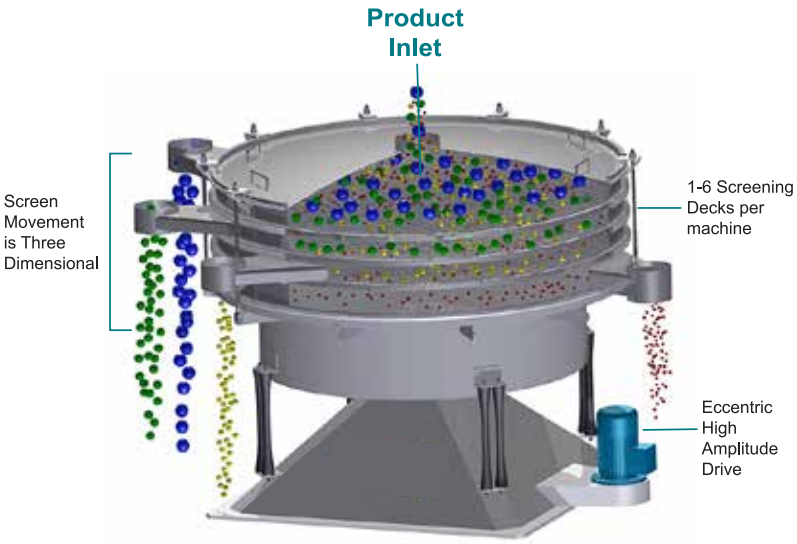

View of Tumbler Screener, Screen Deck

GKM KTS-V Vibratory Screener

GKM KTS 2400 2 Deck Tumbler Screener

Features:

» Easy access for cleaning and maintenance

» Available in a range of sizes from 100 to 25,000 liter capacity

» Low energy, gentle mixing action with minimal heat generation

» Rapid mixing with fast and full discharge guaranteed

» Minimum wear even when processing highly abrasive materials

Gardner Mixers & Blenders

Kemutec offers an extensive range of Gardner Mixers and Blenders. With over 150 years of experience, we can provide solutions for all powder blending applications.

Gentle to High Intensity Powder Blending

Range Information and Customization:
Gardner Mixers and Blenders cover extensive sizes and options:

» Batch processing
» Continuous processing
» Jacketed vessels for heating and cooling
» Liquid addition option available
» Variety of discharge valves, including “no dead-pocket” plug valves
» High-shear choppers and intensifiers
» Cantilever shaft option for hygiene

L Series U-Trough Ribbon Mixers
Designed with hygiene in mind, the L Series U-Trough Ribbon Mixer is perfect for small batch applications. This neat and compact range of mixers are supplied with working capacities of 35 - 400 liters. A large, hinged lid and all-around access to the outlet makes for easy filling and emptying.

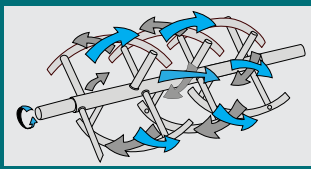

L Series U-Trough Ribbon Mixer Agitator

HE Series U-Trough Ribbon Mixers
Capacities range from 100 to 20,000 liters. HE Series U-Trough mixers have an unconventional short aspect ratio (length to diameter) mixing troughs. Short mixing times combined with low energy, gentle action, and high efficiency ensure that minor ingredients are dispersed homogeneously without the need for pre-mixing.

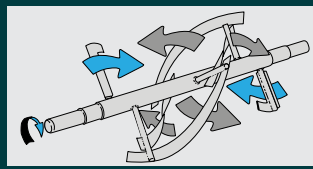

H Series U-Trough Ribbon Mixer Agitator

PE Series Plow Mixers
High intensity, high energy, high shear, high speed plow type mixers with cylindrical short aspect ratio mixing chambers. Extra shear can be achieved by adding side cutters or intensifiers. Alternative trough shapes are available to suit specific application requirements. Capacities range from 50 to 50,000 liters.

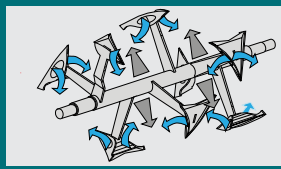

PE Series Plow Mixer Agitator

Continuous Mixers
Based upon the tried and tested agitator designs of batch mixers, Kemutec offers a range of continuous Gardner Mixers, custom built to meet individual process requirements. Typical capacities are 50 to 20,000 liters per hour with aspect ratios of 4:1 or more. An adjustable overflow weir plate is fitted at the discharge end and the agitator is biased to promote flow towards this end while ensuring that the dwell time is adequate for the process.

Double Cone Blenders
The gentle, low energy tumbling action of the Double Cone Blender is ideal for blending the most delicate and fragile products and for mixing very heavy and abrasive products. Typical capacities are 2 to 10,000 liters per hour, the Double Cone Blenders feature our unique multi-shear deflector plates in the center of the vessel. They can also be designed and built as processors for sterilizing and drying.

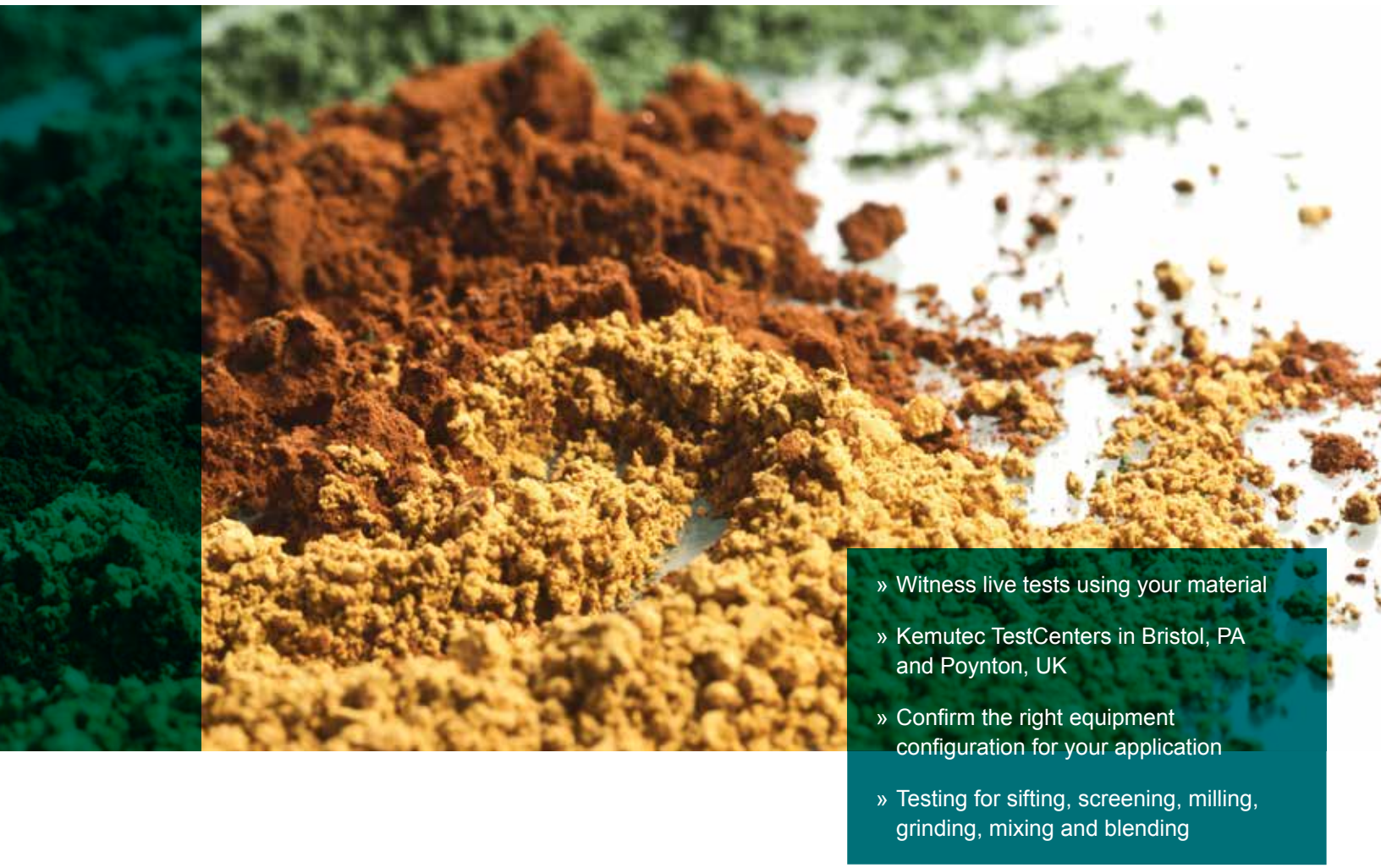

- Witness live tests using your material
- Kemutec TestCenters in Bristol, PA and Poynton, UK
- Confirm the right equipment configuration for your application
- Testing for sifting, screening, milling, grinding, mixing and blending

If you were a bulk material, we'd know everything about you

If you were our customer, we'd have already tested your product. No matter what materials you work with, we know about them and have tested the appropriate sifter, screener, mill or blending system for them. That's because we've already tested more than 4,000 bulk materials in more than 40,000 tests – delivering results you can rely on.

If your particular product hasn't been tested yet, our TestCenter will soon provide you with comprehensive answers. Proven bulk materials technology from Kemutec. Tested and approved. So you can be certain that our sifting, screening, milling, and blending systems are perfectly compatible with your materials.

Complete after-sales solutions for your requirements

Looking for after-sales solutions? Our extensive AfterMarket program provides you with after-sales services – customized to your specific requirements.

The framework of our AfterMarket program is designed with you in mind. With the guidance of our experienced after-sales team, you can create AfterMarket packages comprised of original spare and wear parts, various services and high-quality components to meet your needs.

Our AfterMarket program is based on a modular principle – you can pick and choose any individual product or a combination thereof. AfterMarket service categories focused on repair, inspection, management and support help to easily find the appropriate products.

We welcome the opportunity to provide you with individual consultation, either as part of an AfterMarket contract or on an individual basis. Whatever Full Service means to you – let's create it together!

BV-P5079EN All information is given without obligation.
All specifications are subject to change. © 2020

Kemutec specializes in powder processing equipment and systems. Our line includes sifters, screeners, kibblers/pre-breakers, cone mills, universal mills, air classifier mills, and mixers. No matter the application Kemutec has the material handling technology.

Expertise in material handling technology

kemutec
schenckprocess group

Kemutec
130 Wharton Road
Keystone Industrial Park
Bristol, PA 19007
215-788-8013
sales@kemutecusa.com
www.kemutecusa.com

we make processes work