Putise

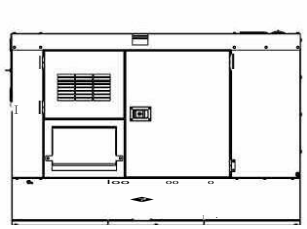

Generator set

Sound-proof type

DT165P5S-AU

SPECIFICATIONS

DTP-AU series
DT165P5S-AU

50 Hz @ 1500rpm,3-phase/4-wiring

1 Standards & Conditions

Design Standards

The designs and the productions are in conformity with:

- Conformite Europeenne (CE)
- ISO8528-5:2005
- AS 3000-2018
- AS 3010-2017

Environmental Operating Conditions

- Installation place: Outdoors or indoors (well ventilated).
- Ambient temperature: -25℃ to 50℃.The coolant heater is needed when the temperature is below 5℃
- Humidity: Less than 90%.
- Altitude: Below one thousand (1000) meters above sea level.

Factory Inspection

- Inspection items.
- Protection devices working test.
- Starting ability in normal temperature.
- 50% rated power load moment capability.
- Voltage deviation and speed variation: 0%, 25%, 50%, 75%, 100%, 110% Load.

Painting Process

- Painting process specifications and colors are based on the manufacturer's standard.
- The customer could also choose the color which the manufacturer offers.

2 General Features

- PowerLink engine 6D6.5TAG2
- Close coupled to PowerLink alternator PL3EM
- Microprocessor control module PLC-920
- Main circuit breaker: 320A
- Rotate speed governor: Electric fuel control
- Excitation system: Self excited,SHUNT
- A.V.R model: SX440
- Key switch
- Emergency stop switch
- ATS(automatic transfer switch)receptacle
- Remote run connector
- 2x12V/72AH sealed for life maintenance free battery
- Lockable battery isolator switch
- Powder coated canopy
- 50℃ radiator
- Steel base frame
- Vibration isolators between the engine/alternator and base frame
- Dry type air filter
- Base fuel tank for 24 hours running
- Drain points for fuel tank
- Operation Manual / Specifications

3 Equipment

General technical data

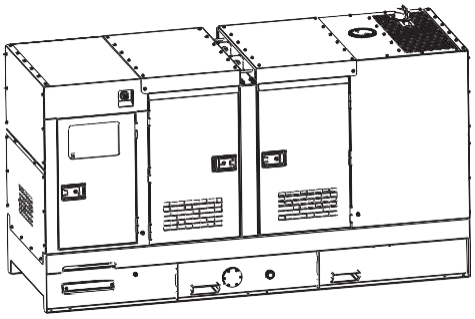

Model. DT165P5S-AU

Tank capacity. 800L

Dry weight..... 2775kg

Sound pressure level @ 7m..... 71.0dBA

Dimensions L×W×H. 3200x1320x2270mm

Standby Power.....182kVA/145kW

Prime Power..... 165kVA/132kW

Voltage	380V		400V		415V	
Ampere	250.7A		238.2A		229.6A	
Genset Fuel Consumption						
Frequency/Load	25%	50%	75%	100%	110%	
50Hz (L/h)	9	17	25	33	36	

3RZHU 6\VWHP

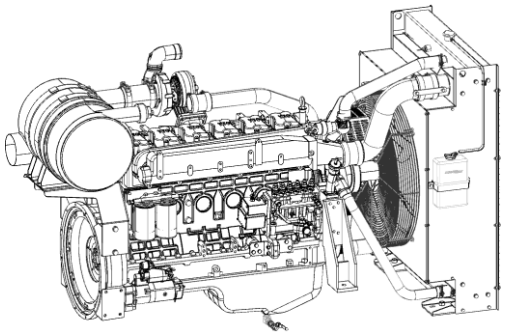

Engine Manufacturer/Brand ..... Powerlink
Engine Model..... 6D6.5TAG2
Dimensions L×W×H. .....1456×710×1080mm
Dry Weigh (approx.) 650kg
Number of Cylinders. 6
Bore.....110mm
Stroke..... 125mm
Displacement. 6.5L
Compression Ratio..... 17.0
Type of injection.....Direct injection
Intake System. ..... Turbocharged and charge air cooled
Intake Resistance .....≦5kPa
Cooling System..... Water cooled
Fan .....Pusher
Battery Voltage V
Type of Fuel..... No.2 or ASTM D975
Type of Oil .....API CF/SE or CCMCF4
Oil Capacity 16.0L
Type of Coolant..... Glycol mixture
Coolant Capacity 21.0L
Back Pressure .....≦10.1kPa
Standby Power.....165kW
Prime Power.....150kW

Alternator

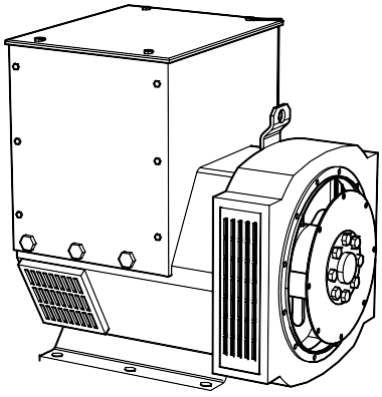

Alternator Manufacturer/Brand..... PowerLink
Alternator Model..... PL3EM
Exciter ..... Brushless
Cooling Fan ..... Cast alloy aluminum
Windings ..... 100% copper
Insulation Class..... H
Winding Pitch 2/3
Terminals.....12
Drip Proof..... P23
Altitude .....≤1000m
Overspeed.....2250rpm
Air Flow.....N/A
Voltage Regulation ..... ±1.0%
Total Harmonic TGH / THCat no load < 1.5 % - on load < 5%
Telephone Interference..... THF<2%;TIF<50

PLC-920 Control System

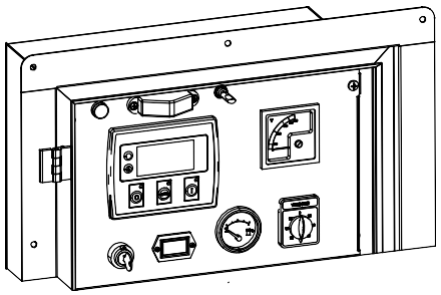

PLC-920 is an advanced control module based on microprocessor designed to control the engine via push buttons on the front panel. The module is used to start and stop the engine and indicate fault conditions, automatically shutting down the engine and giving a truefirst up fault condition of an engine failure.

Standard Control Function

- Manual Engine Control Module
- Low Oil Pressure
- High Engine Temperature
- Auxiliary Shutdown
- Overspeed Protection
- Protection hold-off timer
- Charge Failure warning

4 Overall Dimensions

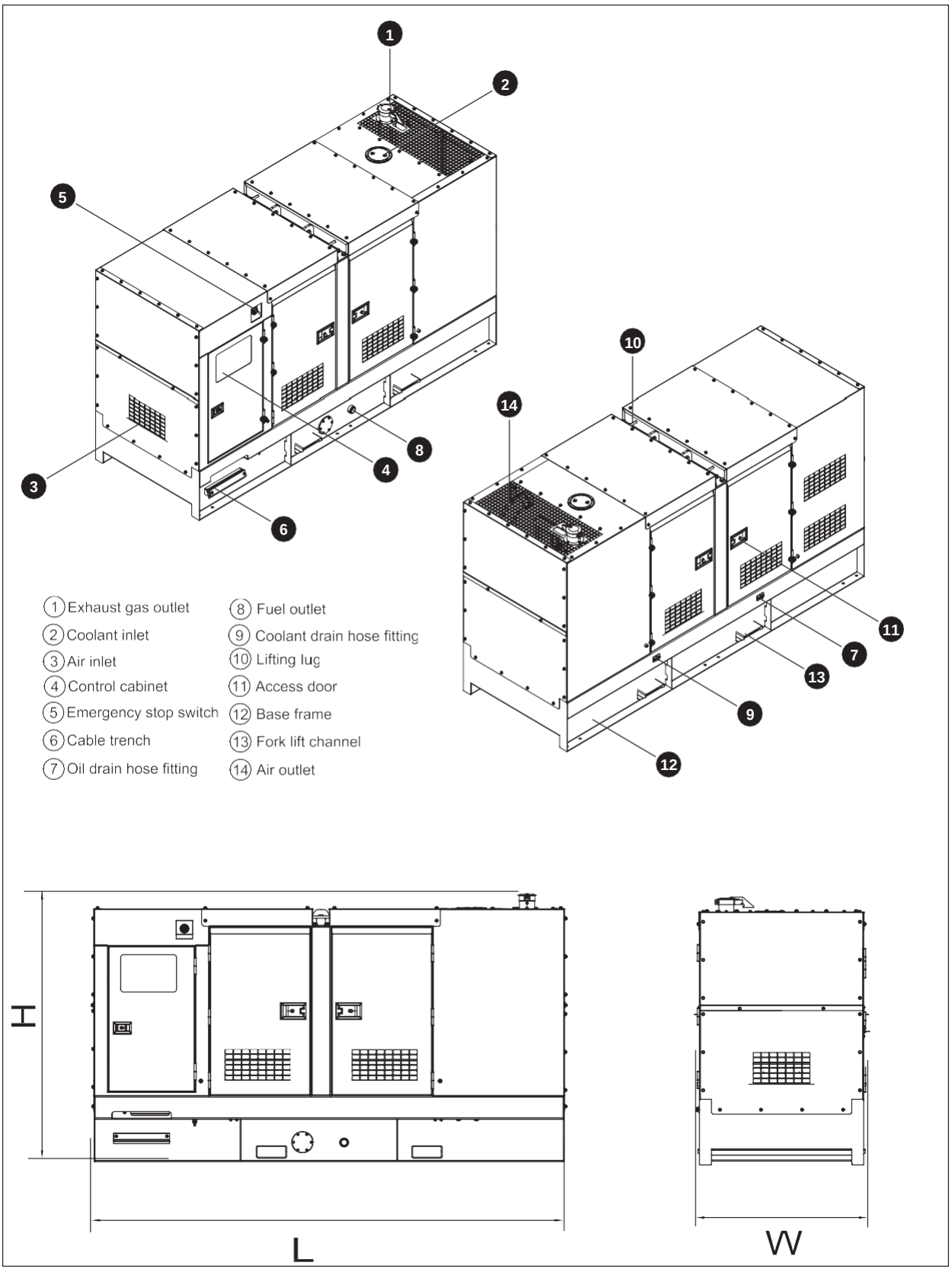

5 Control System

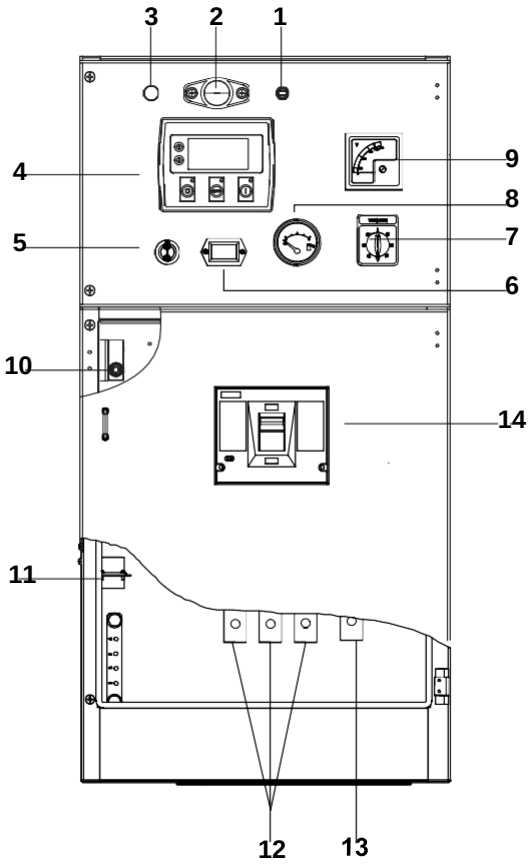

Control & field wiring cabinet

1	Control cabinet lamp switch
2	Control cabinet lamp
3	Charge indicator
4	Control module
5	Key switch
6	Time counter
7	Voltage changer-over switch
8	Fuel level meter
9	Voltage meter
10	Limit switch
11	Mains input/Remote control/ATS connector
12	Live wire terminal
13	Neutral wire terminal
14	Main circuit breaker

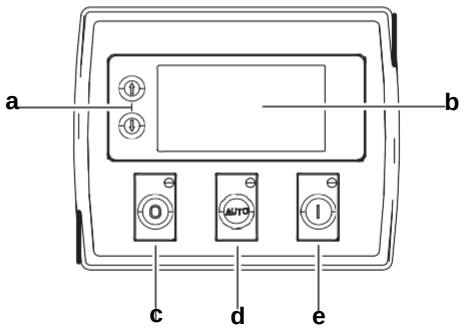

Control module

Ref.	Description
a	Navigation button£» Accept (Configuration mode only)
b	Main status display
c	Stop/reset button£» Next page (Configuration mode only)
d	Auto start button£» Decrease value/next item (Configuration mode only)
e	Start button£» Increase value/next item (Configuration mode only)

1000033905-A2-E
10.2020

2022 GOGOPOWER